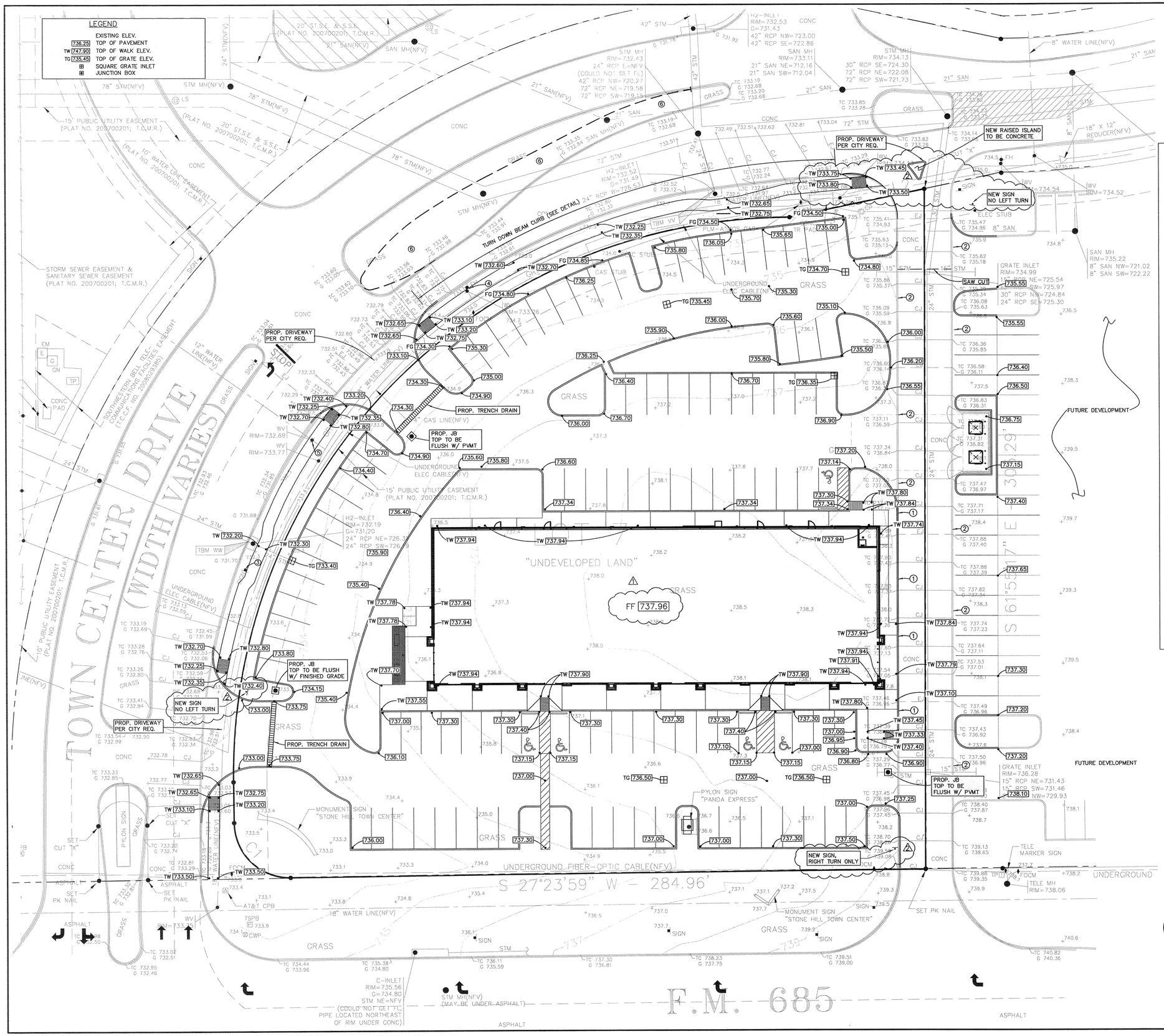

GRAPHIC SCALE

20 0 10 20 40 80

(IN FEET)
1 inch = 20 ft.

NOTES

NOTE:
SEE SHEET C-0 FOR ADDITIONAL TOPOGRAPHIC INFORMATION AND SHEET C-8 & C-9 FOR GENERAL NOTES & DETAILS.

NOTE: COORD. W/ LANDSCAPE DWGS FOR UNDERGROUND IRRIGATION SYSTEM.

NOTE:
CONTRACTOR TO FIELD VERIFY ALL CRITICAL EXISTING ELEV'S, LOCATION AND FLOWLINES OF EXISTING STORM SEWER, DRAINAGE FACILITIES, WATER AND SANITARY SEWER BEFORE COMMENCING ANY CONSTRUCTION.

NOTE:
FOR ALL DEMOLITION COORD W/ ARCHITECT AND/OR PROJECT ENGINEER.

OWNER TO OBTAIN ALL PERMITS REQUIRED BY THE CITY OF PFLUGERVILLE AND ALL GOVERNMENTAL AUTHORITIES WITH JURISDICTION, PRIOR TO STARTING CONSTRUCTION OF UTILITY AND/OR DRIVEWAY'S WITHIN PUBLIC RIGHTS OF WAY.

NOTE:
CONTRACTOR SHALL BE RESPONSIBLE FOR COORDINATING WITH CIVIL DRAINAGE PLAN AND ASSURE POSITIVE DRAINAGE FROM THE BUILDING OVER THE SIDEWALK AND TO THE PARKING LOT. ANY PROBLEMS ENCOUNTERED DURING CONSTRUCTION SHALL BE COORDINATED WITH THE CIVIL ENGINEER BEFORE FINAL CONSTRUCTION. IF LANDSCAPING BEDS ARE USED ADJACENT TO THE BUILDING CONTRACTOR SHALL ASSURE THAT DRAINAGE IS NOT BLOCKED. REFER TO LANDSCAPE FRENCH DRAIN DETAIL IF NEEDED.

WHEN A LANDSCAPE MULCH BERM IS INSTALLED ADJACENT TO THE BUILDING, THE LANDSCAPER SHALL PROVIDE A FRENCH DRAIN AS DETAILED ON SHEET C-8. CONTRACTOR SHALL BE RESPONSIBLE FOR COORDINATING THE CONNECTION OF THE FRENCH DRAIN TO THE UNDERGROUND STORM SEWER USING A MINIMUM OF 1.00% ON BOTH THE FRENCH DRAIN AND STORM SEWER PIPE.

NOTE:
CONTRACTOR SHALL COORDINATE WITH OWNER, GEOTECHNICAL ENGINEER AND STRUCTURAL ENGINEER FOR SELECT FILL REQUIREMENTS AND PROCEDURES UNDER BUILDING SLABS. SEE SOILS REPORT FOR ALL REQUIRED DESIGN CRITERIA. CONTRACTOR SHALL NOT PROCEED WITH CONSTRUCTION UNTIL THE REQUIRED SELECT FILL PROCEDURE UNDER BUILDING SLABS HAS BEEN APPROVED.

NOTE:
CONTRACTOR SHALL ALSO COORDINATE WITH SOILS REPORT FOR ALL REQUIRED FILL, COMPACTION AND LIME STABILIZATION UNDER PROPOSED PAVING SECTIONS.

NOTE:
CLEAN-OUTS, INLETS AND/OR JUNCTION BOXES LOCATED IN PAVEMENT OR SIDEWALK SHALL HAVE TRAFFIC BEARING LIDS OR GRATES, WHEN LOCATED IN GRASS, THEY SALL HAVE PEDESTRIAN DUTY LIDS OR GRATES.

NOTE:
ALL EXISTING M.H., WATER VALVES, FIRE HYDRANTS & EXISTING STRUCTURES SHALL BE VERTICALLY ADJUSTED TO BE FLUSH /W NEW PVMT ELEVATION OR 3" ABOVE NEW FINISHED GRADE ELEVATIONS AS REQUIRED.

NOTE:
COORDINATE W/ MEP DWGS FOR LOCATION OF ALL GAS & ELECTRICAL SLEEVES

ALL ISLANDS TO BE RAISED ABOVE TOP OF CURB FOR DRAINAGE
COORD W/ LANDSCAPE DWGS FOR RQMTS.
CONTRACTOR TO ASSURE POSITIVE DRAINAGE AROUND ALL ISLAND TO ALL INLETS

NOTE:
ALL SIDEWALKS SHALL HAVE A MAXIMUM CROSS SLOPE OF 2.00% PER ADA REQUIREMENTS. ALL ADA RAMPS SHALL BE PER ADA REQUIREMENTS

NOTE:
ALL CURBS WITHIN THE PUBLIC R.O.W. WILL BE REQUIRED TO CONFORM TO CITY DETAIL SD-06

"ALL RESPONSIBLILITY FOR THE ADEQUACY OF THESE PLANS REMAINS WITH THE ENGINEER WHO PREPARED THEM. IN REVIEWING THESE PLANS, THE CITY OF PFLUGERVILLE MUST RELY ONTHE ADEQUACY OF THE WORK OF THE DESIGN ENGINEER"

1. EXIST. CURB TO BE REMOVED & REPLACED W/ NEW CURB OR WALK AS REQUIRED. CURB ELEV VARIES FROM 4" TO 9" (TYP) SAW CUT AS REQ.
2. EXIST CURB TO BE REMOVED (SAW CUT AS REQ.) MATCH EXIST PVMT ELEV (TYP)
3. EXISTING SIGN TO BE REMOVED & RELOCATED AS REQUIRED BY CITY
4. RELOCATE FIRE HYDRANT & VALVE AS REQUIRED TO AVOID CONFLICT WITH NEW WALK PER CITY REQUIREMENTS
5. EXISTING VALVE TO BE SET FLUSH WITH NEW WALK
6. PROPOSED LEFT TURN LANE (TO BE FURNISHED AT A LATER DATE)

TEXAS ENGINEERING & MAPPING CO.
REGISTRATION # F-2906

STATE OF TEXAS
CARLOS J. BARILLAS
50474
REGISTERED PROFESSIONAL ENGINEER

C-1 GRADING & DRAINAGE

Scale: 1"=20' JOB NO: 356-123S

SEE SHT C-0 FOR TOPOGRAPHIC SURVEY
SEE SHT C-1 FOR GRADING & DRAINAGE
SEE SHT C-2 FOR STORM SEWER LAYOUT
SEE SHT C-3 FOR DRAINAGE AREA MAP
SEE SHT C-4 FOR SANITARY & WATER
SEE SHT C-5 FOR PAVEMENT LAYOUT
SEE SHT C-6 FOR SWPPP PLAN
SEE SHT C-7 FOR SWPPP NOTES & DETAILS
SEE SHT C-8 FOR NOTES & DETAILS
SEE SHT C-9 FOR NOTES & DETAILS
SEE SHT C-10 FOR LEFT TURN LANE
SEE SHT C-11 FOR TRAFFIC CONTROL PLAN

NewQuest PROPERTIES
8807 W. SAM HOUSTON PARKWAY N., SUITE 200
HOUSTON, TEXAS 77040
P. 281.477.4300 F. 281.477.4399

STONE HILL TOWN CENTER
LOT 7 BLK 4
1616 TOWN CENTER
PFLUGERVILLE, TX
78660-7610
A DEVELOPMENT OF:
NEWQUEST PROPERTIES

ISSUE LOG

NO.	DESCRIPTION	DATE
	ISSUE FOR PERMIT	06/15/12
1	RAISED FINISHED FLOOR	08/09/12
2	ISSUE PER CITY SITE PLAN SUBMITTAL COMMENTS	08/14/12
	ISSUED FOR CONSTRUCTION	09/19/12

TEXAS ENGINEERING AND MAPPING
12810 CENTURY DRIVE
STAFFORD, TEXAS 77477
PHONE: (281) 491-2525 FAX: (281) 491-2535

DATE:	JOB:	SCALE:
05-25-12	12024	1"=20'

SHEET NO.

C-1

COPYRIGHT © 2012 OBRIEN THESE DRAWINGS, OR PARTS THEREOF, MAY NOT BE REPRODUCED IN ANY FORM, BY ANY METHOD, FOR ANY PURPOSE, WITHOUT PRIOR WRITTEN CONSENT FROM OBRIEN

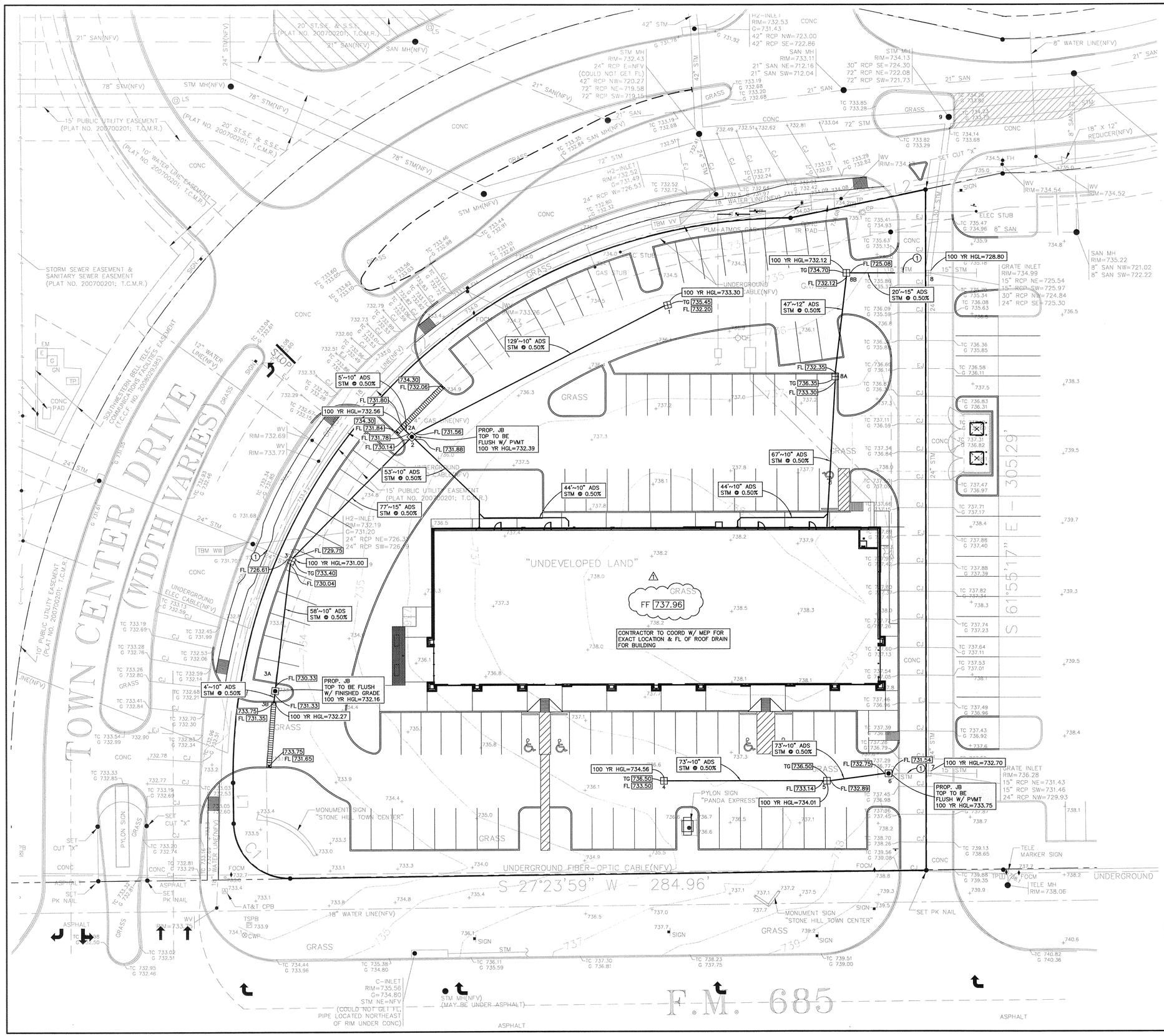

GRAPHIC SCALE

20 0 10 20 40 80

(IN FEET)
1 inch = 20 ft.

NOTE:
SEE SHEET C-0 FOR ADDITIONAL TOPOGRAPHIC INFORMATION AND SHEET C-8 & C-9 FOR GENERAL NOTES & DETAILS.

NOTE: COORD. W/ LANDSCAPE DWGS FOR UNDERGROUND IRRIGATION SYSTEM,

NOTE:
CONTRACTOR TO FIELD VERIFY ALL CRITICAL EXISTING ELEV'S, LOCATION AND FLOWLINES OF EXISTING STORM SEWER, DRAINAGE FACILITIES, WATER AND SANITARY SEWER BEFORE COMMENCING ANY CONSTRUCTION.

NOTE:
FOR ALL DEMOLITION COORD W/ ARCHITECT AND/OR PROJECT ENGINEER.

OWNER TO OBTAIN ALL PERMITS REQUIRED BY THE CITY OF PFLUGERVILLE AND ALL GOVERNMENTAL AUTHORITIES WITH JURISDICTION, PRIOR TO STARTING CONSTRUCTION OF UTILITY AND/OR DRIVEWAYS WITHIN PUBLIC RIGHTS OF WAY.

NOTE:
CONTRACTOR SHALL BE RESPONSIBLE FOR COORDINATING WITH CIVIL DRAINAGE PLAN AND ASSURE POSITIVE DRAINAGE FROM THE BUILDING OVER THE SIDEWALK AND TO THE PARKING LOT. ANY PROBLEMS ENCOUNTERED DURING CONSTRUCTION SHALL BE COORDINATED WITH THE CIVIL ENGINEER BEFORE FINAL CONSTRUCTION. IF LANDSCAPING BEDS ARE USED ADJACENT TO THE BUILDING CONTRACTOR SHALL ASSURE THAT DRAINAGE IS NOT BLOCKED. REFER TO LANDSCAPE FRENCH DRAIN DETAIL IF NEEDED.

WHEN A LANDSCAPE MULCH BERM IS INSTALLED ADJACENT TO THE BUILDING, THE LANDSCAPER SHALL PROVIDE A FRENCH DRAIN AS DETAILED ON SHEET C-8. CONTRACTOR SHALL BE RESPONSIBLE FOR COORDINATING THE CONNECTION OF THE FRENCH DRAIN TO THE UNDERGROUND STORM SEWER USING A MINIMUM OF 1.00% ON BOTH THE FRENCH DRAIN AND STORM SEWER PIPE.

NOTE:
CONTRACTOR SHALL COORDINATE WITH OWNER, GEOTECHNICAL ENGINEER AND STRUCTURAL ENGINEER FOR SELECT FILL REQUIREMENTS AND PROCEDURES UNDER BUILDING SLABS. SEE SOILS REPORT FOR ALL REQUIRED DESIGN CRITERIA. CONTRACTOR SHALL NOT PROCEED WITH CONSTRUCTION UNTIL THE REQUIRED SELECT FILL PROCEDURE UNDER BUILDING SLABS HAS BEEN APPROVED.

NOTE:
CONTRACTOR SHALL ALSO COORDINATE WITH SOILS REPORT FOR ALL REQUIRED FILL, COMPACTION AND LIME STABILIZATION UNDER PROPOSED PAVING SECTIONS.

NOTE:
CLEAN-OUTS, INLETS AND/OR JUNCTION BOXES LOCATED IN PAVEMENT OR SIDEWALK SHALL HAVE TRAFFIC BEARING LIDS OR GRATES, WHEN LOCATED IN GRASS, THEY SALL HAVE PEDESTRIAN DUTY LIDS OR GRATES.

NOTE:
ALL EXISTING M.H., WATER VALVES, FIRE HYDRANTS & EXISTING STRUCTURES SHALL BE VERTICALLY ADJUSTED TO BE FLUSH /W NEW PVMT ELEVATION OR 3" ABOVE NEW FINISHED GRADE ELEVATIONS AS REQUIRED.

NOTE:
COORDINATE W/ MEP DWGS FOR LOCATION OF ALL GAS & ELECTRICAL SLEEVES

NOTE:
6" MINIMUM CLEARANCE IS REQUIRED AT POINT OF CROSSING BETWEEN ALL PROPOSED UNDERGROUND UTILITIES

CONTRACTOR TO OBTAIN ALL PERMITS REQUIRED BY "REGULATIONS OF PFLUGERVILLE, TEXAS FOR FLOOR PLAIN MANAGEMENT" PRIOR TO STARTING CONSTRUCTION

CLEAN-OUTS LOCATED IN PAVEMENT AREAS SHALL HAVE TRAFFIC BEARING LIDS.

"ALL RESPONSIBILITY FOR THE ADEQUACY OF THESE PLANS REMAINS WITH THE ENGINEER WHO PREPARED THEM. IN REVIEWING THESE PLANS, THE CITY OF PFLUGERVILLE MUST RELY ONTHE ADEQUACY OF THE WORK OF THE DESIGN ENGINEER"

LEGEND

703.9	EXISTING ELEV.
TG 747.30	TOP OF GRATE ELEV.
FL 741.30	FLOW LINE ELEV.
⊞	SQUARE GRATE INLET
▣	JUNCTION BOX

① CONTRACTOR TO FIELD VERIFY EXACT LOCATION & DEPTH OF EXISTING 15"& 24" STORM & CONNECT PER CITY REQ.

TEXAS ENGINEERING & MAPPING CO.
REGISTRATION # F-2906

STATE OF TEXAS
CARLOS J. BARILLAS
50474
REGISTERED PROFESSIONAL ENGINEER
9/18/12

C-2 STORM SEWER LAYOUT

Scale: 1"=20' JOB NO: 356-123S

SEE SHT C-0 FOR TOPOGRAPHIC SURVEY
SEE SHT C-1 FOR GRADING & DRAINAGE
SEE SHT C-2 FOR STORM SEWER LAYOUT
SEE SHT C-3 FOR DRAINAGE AREA MAP
SEE SHT C-4 FOR SANITARY & WATER
SEE SHT C-5 FOR PAVEMENT LAYOUT
SEE SHT C-6 FOR SWPPP PLAN
SEE SHT C-7 FOR SWPPP NOTES & DETAILS
SEE SHT C-8 FOR NOTES & DETAILS
SEE SHT C-9 FOR NOTES & DETAILS
SEE SHT C-10 FOR LEFT TURN LANE
SEE SHT C-11 FOR TRAFFIC CONTROL PLAN

NewQuest PROPERTIES™
8807 W. SAM HOUSTON PARKWAY N., SUITE 200
HOUSTON, TEXAS 77040
P. 281.477.4300 F. 281.477.4399

STONE HILL TOWN CENTER

LOT 7 BLK 4

1616 TOWN CENTER
PFLUGERVILLE, TX
78660-7610

A DEVELOPMENT OF:
NEWQUEST PROPERTIES

ISSUE LOG

NO.	DESCRIPTION	DATE
	ISSUE FOR PERMIT	06/15/12
1	RAISED FINISHED FLOOR	08/09/12
	ISSUED FOR CONSTRUCTION	09/19/12

TEXAS ENGINEERING AND MAPPING
12810 CENTURY DRIVE
STAFFORD, TEXAS 77477
PHONE: (281) 491-2525 FAX: (281) 491-2535

DATE:	JOB:	SCALE:
05-25-12	12024	1"=20'

SHEET NO.

C-2

COPYRIGHT © 2012 OBRIEN THESE DRAWINGS, OR PARTS THEREOF, MAY NOT BE REPRODUCED IN ANY FORM, BY ANY METHOD, FOR ANY PURPOSE, WITHOUT PRIOR WRITTEN CONSENT FROM OBRIEN

STORM SEWER CALCULATIONS
STONE HILL TOWN CENTER
CITY OF PFLUGERVILLE
PREPARED ON: 06-13-12 JOB NO.: 356-123S

25 YEAR STORM TABLE-TRACT 13

Inlet From	Inlet To	Area No.	Delta Area	ACC Area (acres)	Runoff Coefficient C	Sum of C x A	Intensity I (25yr) (In/Hr)	Sum of Flows (cfs)	Time of C (min)	Pipe Time (min)	Reach Length (ft)	Diameter or Rise (inches)	Area (ft²)	Hydraulic Radius (ft)	Slope (%)	Mannings "n"	Design Capacity (cfs)	Design Velocity (ft/s)	Fall (ft)	Drop (ft)	Flowline Elevation Upstream (ft)	Top of Pipe Elevation Upstream (ft)	Flowline Elevation Downstream (ft)	Top of Pipe Elevation Downstream (ft)	25y Actual Velocity (ft/s)	Hydraulic Gradient (%)	Change in Head (ft)	Minor Losses (ft)	Elevation of Hyd Grad Upstream (ft)	Elevation of Hyd. Grad. Downstream (ft)	Throat Area Required (ft²)	Inlet size (ft)	Throat Area Provided (ft²)	pavement Elevation Upstream (ft)	pavement Elevation Downstream (ft)	cover Upstream (ft)	cover Downstream (ft)
1	2		0.17	0.17	0.87	0.148	9.839	1.455	5.00	0.8058	129	10	0.5454	0.2083	0.5	0.011	1.831	3.357	0.645	0	732.20	733.03	731.56	732.39	2.668	0.4420	0.5701	0.0553	733.01	732.39	0.68	24	1.40	735.45	734.70	2.42	2.31
2	3		0	0.54	0.87	0.470	9.569	4.496	5.81	0.3503	77	15	1.2272	0.3125	0.5	0.011	5.398	4.399	0.385	1.42	730.14	731.39	729.75	731.00	3.663	0.4852	0.3736	0.1042	731.48	731.00	0.00	24	1.40	734.70	733.40	3.31	2.40
3	OUT		0.16	0.87	0.87	0.757	9.457	7.158	6.16	0.1463	20	24	3.1416	0.5	0.5	0.013	15.996	5.092	0.1	3.14	726.61	728.61	726.51	728.51	2.278	0.1003	0.0201	0.0403	724.85	724.79	0.61	32	2.49	733.40	731.20	4.79	2.69
2A	2		0.21	0.21	0.87	0.183	9.839	1.798	5.00	0.0253	5	10	0.5454	0.2083	0.5	0.011	1.831	3.357	0.025	0	731.80	732.63	731.78	732.61	3.296	0.6744	0.0337	0.0843	732.51	732.39	0.83	24	1.40	734.20	734.70	1.57	2.09
2B	2		0.16	0.16	0.87	0.139	9.839	1.370	5.00	0.8296	125	10	0.5454	0.2083	0.5	0.011	1.831	3.357	0.625	0	732.50	733.33	731.88	732.71	2.511	0.3915	0.4894	0.049	732.93	732.39	0.64	24	1.40	737.34	734.70	4.01	1.99
3B	3A		0.17	0.17	0.87	0.148	9.839	1.455	5.00	0.025	4	10	0.5454	0.2083	0.5	0.011	1.831	3.357	0.02	0	731.35	732.18	731.33	732.16	2.668	0.4420	0.0177	0.0553	732.24	732.16	0.68	24	1.40	733.75	734.30	1.57	2.14
3A	3		0	0.17	0.87	0.148	9.831	1.454	5.02	0.3626	58	10	0.5454	0.2083	0.5	0.011	1.831	3.357	0.29	1	730.33	731.16	730.04	730.87	2.666	0.4412	0.2559	0.0552	731.31	731.00	0.00	24	1.40	734.30	733.40	3.14	2.53
4	5		0.17	0.17	0.87	0.148	9.839	1.455	5.00	0.456	73	10	0.5454	0.2083	0.5	0.011	1.831	3.357	0.365	0	733.50	734.33	733.14	733.97	2.668	0.4420	0.3226	0.0553	734.35	733.97	0.68	24	1.40	736.50	736.50	2.17	2.53
5	6		0.1	0.27	0.87	0.235	9.684	2.275	5.46	0.1611	28	12	0.7854	0.25	0.5	0.011	2.977	3.791	0.14	0.25	732.89	733.89	732.75	733.75	2.896	0.4084	0.1144	0.0651	733.92	733.75	0.39	24	1.40	736.50	737.00	2.62	3.26
6	7		0	0.27	0.87	0.235	9.631	2.262	5.62	0.1627	18	15	1.2272	0.3125	0.5	0.011	5.398	4.399	0.09	1.21	731.54	732.79	731.45	732.70	1.843	0.1229	0.0221	0.0264	732.74	732.70	0.00	24	1.40	737.00	736.28	4.22	3.59
7	8		0.59	0.86	0.87	0.748	9.578	7.166	5.78	1.544	225	24	3.1416	0.5	2.06	0.011	38.373	12.214	4.635	1.52	729.93	731.93	725.29	727.29	2.281	0.1005	0.2262	0.0404	728.98	728.72	2.23	32	2.49	736.28	734.99	4.36	7.70
8	9		0.61	1.84	0.87	1.601	9.075	14.527	7.42	0.3942	70	30	4.9087	0.625	0.77	0.011	42.536	8.665	0.539	0.46	724.83	727.33	724.29	726.79	2.959	0.1257	0.088	0.068	728.72	728.56	2.24	32	2.49	734.99	734.13	7.66	7.34
8A	8B		0.1	0.26	0.87	0.226	9.839	2.226	5.00	0.2764	47	12	0.7854	0.25	0.5	0.011	2.977	3.791	0.235	0	732.35	733.35	732.12	733.12	2.834	0.3910	0.1838	0.0623	733.36	733.12	0.40	24	1.40	736.35	734.70	3.00	1.59
8B	8		0.11	0.37	0.87	0.322	9.745	3.137	5.28	0.1304	20	15	1.2272	0.3125	0.5	0.011	5.398	4.399	0.1	7.04	725.08	726.33	724.98	726.23	2.556	0.2362	0.0472	0.0507	728.81	728.72	0.43	24	1.40	734.70	734.99	8.38	8.76
8A-1	8A		0.16	0.16	0.87	0.139	9.839	1.370	5.00	0.9292	140	10	0.5454	0.2083	0.5	0.011	1.831	3.357	0.7	0	734.00	734.83	733.30	734.13	2.511	0.3915	0.5481	0.049	734.73	734.13	0.64	24	1.40	737.34	736.35	2.51	2.22

STORM SEWER CALCULATIONS
STONE HILL TOWN CENTER
CITY OF PFLUGERVILLE
PREPARED ON: 06-13-12 JOB NO.: 356-123S

100 YEAR STORM TABLE-TRACT 13

Inlet From	Inlet To	Area No.	Delta Area	ACC Area (acres)	Runoff Coefficient C	Sum of C x A	Intensity I (100yr) (In/Hr)	Sum of Flows (cfs)	Time of C (min)	Pipe Time (min)	Reach Length (ft)	Diameter or Rise (inches)	Area (ft²)	Hydraulic Radius (ft)	Slope (%)	Mannings "n"	Design Capacity (cfs)	Design Velocity (ft/s)	Fall (ft)	Drop (ft)	Flowline Elevation Upstream (ft)	Top of Pipe Elevation Upstream (ft)	Flowline Elevation Downstream (ft)	Top of Pipe Elevation Downstream (ft)	100y Actual Velocity (ft/s)	Hydraulic Gradient (%)	Change in Head (ft)	Minor Losses (ft)	Elevation of Hyd. Grad. Upstream (ft)	Elevation of Hyd. Grad. Downstream (ft)	Throat Area Required (ft²)	Inlet size (ft)	Throat Area Provided (ft²)	pavement Elevation Upstream (ft)	pavement Elevation Downstream (ft)	cover Upstream (ft)	cover Downstream (ft)
1	2		0.17	0.17	0.87	0.148	11.880	1.757	5.00	0.6674	129	10	0.5454	0.2083	0.5	0.011	1.831	3.357	0.645	0	732.20	733.03	731.56	732.39	3.222	0.6443	0.8312	0.0806	733.30	732.39	0.82	24	1.40	735.45	734.70	2.42	2.31
2	3		0	0.54	0.87	0.470	11.622	5.460	5.67	0.2884	77	15	1.2272	0.3125	0.5	0.011	5.398	4.399	0.385	1.42	730.14	731.39	729.75	731.00	4.449	0.7158	0.5511	0.1537	731.70	731.00	0.00	24	1.40	734.70	733.40	3.31	2.40
3	OUT		0.16	0.87	0.87	0.757	11.515	8.715	5.96	0.1202	20	24	3.1416	0.5	0.5	0.013	15.996	5.092	0.1	3.14	726.61	728.61	726.51	728.51	2.774	0.1487	0.0297	0.0598	724.88	724.79	0.74	32	2.49	733.40	731.20	4.79	2.69
2A	2		0.21	0.21	0.87	0.183	11.880	2.171	5.00	0.0209	5	10	0.5454	0.2083	0.5	0.011	1.831	3.357	0.025	0	731.80	732.63	731.78	732.61	3.980	0.9832	0.0492	0.123	732.56	732.39	1.01	24	1.40	734.20	734.70	1.57	2.09
2B	2		0.16	0.16	0.87	0.139	11.880	1.654	5.00	0.6871	125	10	0.5454	0.2083	0.5	0.011	1.831	3.357	0.625	0	732.50	733.33	731.88	732.71	3.032	0.5708	0.7135	0.0714	733.17	732.39	0.77	24	1.40	737.34	734.70	4.01	1.99
3B	3A		0.17	0.17	0.87	0.148	11.880	1.757	5.00	0.0207	4	10	0.5454	0.2083	0.5	0.011	1.831	3.357	0.02	0	731.35	732.18	731.33	732.16	3.222	0.6443	0.0258	0.0806	732.27	732.16	0.82	24	1.40	733.75	734.30	1.57	2.14
3A	3		0	0.17	0.87	0.148	11.872	1.756	5.02	0.3003	58	10	0.5454	0.2083	0.5	0.011	1.831	3.357	0.29	1	730.33	731.16	730.04	730.87	3.219	0.6435	0.3732	0.0805	731.45	731.00	0.00	24	1.40	734.30	733.40	3.14	2.53
4	5		0.17	0.17	0.87	0.148	11.880	1.757	5.00	0.3777	73	10	0.5454	0.2083	0.5	0.011	1.831	3.357	0.365	0	733.50	734.33	733.14	733.97	3.222	0.6443	0.4704	0.0806	734.56	734.01	0.82	24	1.40	736.50	736.50	2.17	2.53
5	6		0.1	0.27	0.87	0.235	11.733	2.756	5.38	0.133	28	12	0.7854	0.25	0.5	0.011	2.977	3.791	0.14	0.25	732.89	733.89	732.75	733.75	3.509	0.5995	0.1679	0.0956	734.01	733.75	0.47	24	1.40	736.50	737.00	2.62	3.26
6	7		0	0.27	0.87	0.235	11.682	2.744	5.51	0.1342	18	15	1.2272	0.3125	0.5	0.011	5.398	4.399	0.09	1.21	731.54	732.79	731.45	732.70	2.236	0.1808	0.0325	0.0388	732.77	732.70	0.00	24	1.40	737.00	736.28	4.22	3.59
7	8		0.59	0.86	0.87	0.748	11.631	8.702	5.64	1.3538	225	24	3.1416	0.5	2.06	0.011	38.373	12.214	4.635	1.52	729.93	731.93	725.29	727.29	2.770	0.1482	0.3336	0.0596	729.19	728.80	2.77	32	2.49	736.28	734.99	4.36	7.70
8	9		0.61	1.84	0.87	1.601	11.144	17.839	7.00	0.321	70	30	4.9087	0.625	0.77	0.011	42.536	8.665	0.539	0.46	724.83	727.33	724.29	726.79	3.634	0.1895	0.1327	0.1025	728.80	728.56	2.75	32	2.49	734.99	734.13	7.66	7.34
8A	8B		0.1	0.26	0.87	0.226	11.880	2.687	5.00	0.2289	47	12	0.7854	0.25	0.5	0.011	2.977	3.791	0.235	0	732.35	733.35	732.12	733.12	3.422	0.5700	0.2679	0.0909	733.47	733.12	0.48	24	1.40	736.35	734.70	3.00	1.59
8B	8		0.11	0.37	0.87	0.322	11.790	3.795	5.23	0.1078	20	15	1.2272	0.3125	0.5	0.011	5.398	4.399	0.1	7.04	725.08	726.33	724.98	726.23	3.093	0.3458	0.0692	0.0743	728.94	728.80	0.52	24	1.40	734.70	734.99	8.38	8.76
8A-1	8A		0.16	0.16	0.87	0.139	11.880	1.654	5.00	0.7695	140	10	0.5454	0.2083	0.5	0.011	1.831	3.357	0.7	0	734.00	734.83	733.30	734.13	3.032	0.5708	0.7991	0.0714	734.34	733.47	0.77	24	1.40	737.34	736.35	2.51	2.22

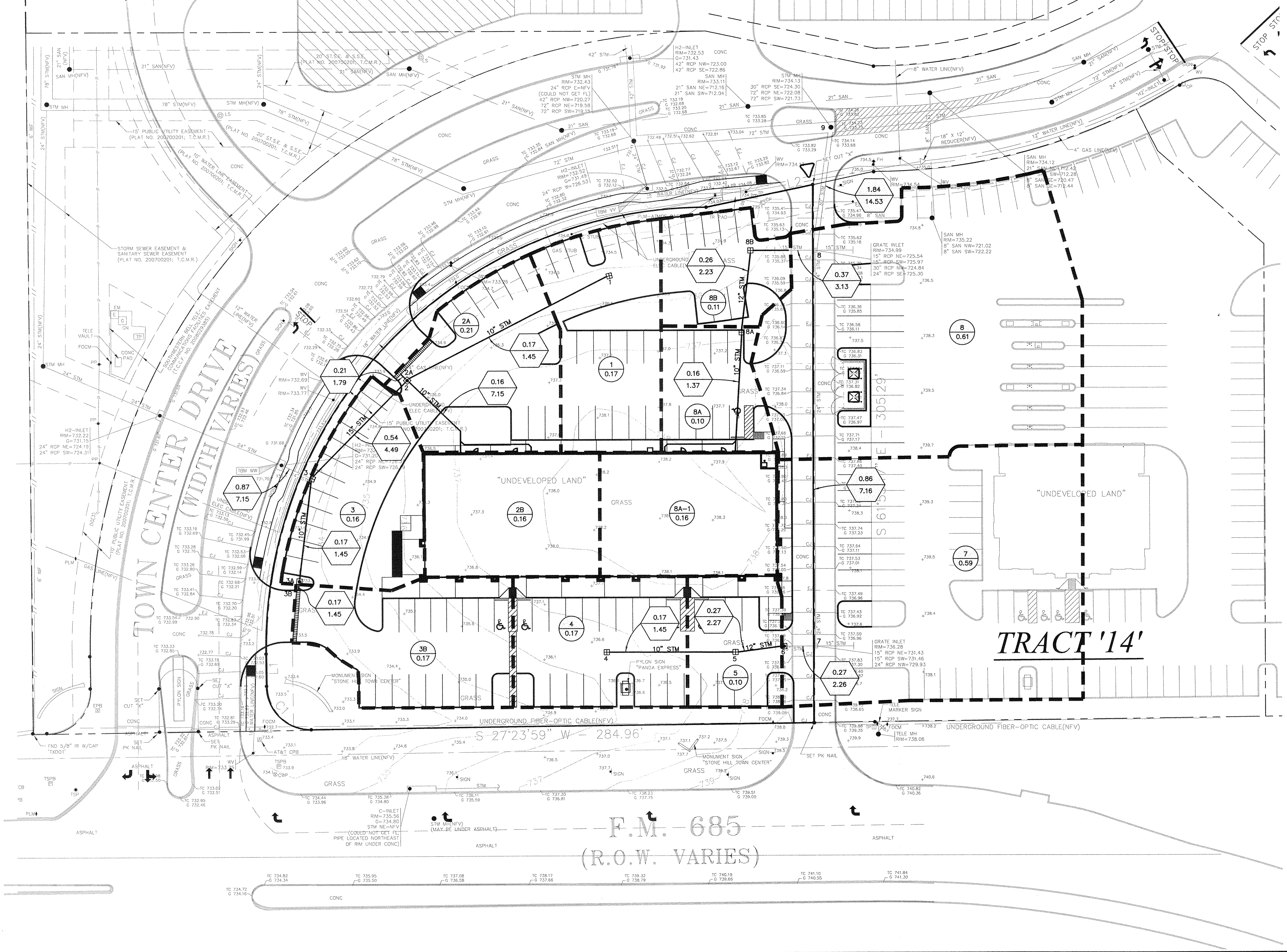

GRAPHIC SCALE
30 0 15 30 60 120
(IN FEET)
1 inch = 30 ft.

NOTES

NOTE:
SEE SHEET C-0 FOR ADDITIONAL TOPOGRAPHIC INFORMATION AND SHEET C-8 & C-9 FOR GENERAL NOTES & DETAILS.

NOTE: COORD. W/ LANDSCAPE DWGS FOR UNDERGROUND IRRIGATION SYSTEM.

NOTE:
CONTRACTOR TO FIELD VERIFY ALL CRITICAL EXISTING ELEV'S, LOCATION AND FLOWLINES OF EXISTING STORM SEWER, DRAINAGE FACILITIES, WATER AND SANITARY SEWER BEFORE COMMENCING ANY CONSTRUCTION.

NOTE:
FOR ALL DEMOLITION COORD W/ ARCHITECT AND/OR PROJECT ENGINEER.

NOTE:
ALL EXISTING M.H., WATER VALVES, FIRE HYDRANTS & EXISTING STRUCTURES SHALL BE VERTICALLY ADJUSTED TO BE FLUSH /W NEW PVMT ELEVATION OR 3" ABOVE NEW FINISHED GRADE ELEVATIONS AS REQUIRED.

OWNER TO OBTAIN ALL PERMITS REQUIRED BY THE CITY OF PFLUGERVILLE AND ALL GOVERNMENTAL AUTHORITIES WITH JURISDICTION, PRIOR TO STARTING CONSTRUCTION OF UTILITY AND/OR DRIVEWAYS WITHIN PUBLIC RIGHTS OF WAY.

"ALL RESPONSIBLILITY FOR THE ADEQUACY OF THESE PLANS REMAINS WITH THE ENGINEER WHO PREPARED THEM. IN REVIEWING THESE PLANS, THE CITY OF PFLUGERVILLE MUST RELY ONTHE ADEQUACY OF THE WORK OF THE DESIGN ENGINEER"

LEGEND

70.5 + EXISTING ELEV.
736.25 TOP OF PAVEMENT
735.45 TOP OF GRATE ELEV.
SQUARE GRATE INLET
JUNCTION BOX
8 / 1.80 — AREA / ACREAGE
0.45 / 3.27 — ACCUMULATIVE ACREAGE / ACCUMULATIVE CFS (25 YR)

TEXAS ENGINEERING & MAPPING CO.
REGISTRATION # F-2906

STATE OF TEXAS
CARLOS J. BARILLAS
50474
REGISTERED PROFESSIONAL ENGINEER
9/19/12

C-3 DRAINAGE AREA MAP

Scale: 1"=30' JOB NO: 356-123S

SEE SHT C-0 FOR TOPOGRAPHIC SURVEY
SEE SHT C-1 FOR GRADING & DRAINAGE
SEE SHT C-2 FOR STORM SEWER LAYOUT
SEE SHT C-3 FOR DRAINAGE AREA MAP
SEE SHT C-4 FOR SANITARY & WATER
SEE SHT C-5 FOR PAVEMENT LAYOUT
SEE SHT C-6 FOR SWPPP PLAN
SEE SHT C-7 FOR SWPPP NOTES & DETAILS
SEE SHT C-8 FOR NOTES & DETAILS
SEE SHT C-9 FOR NOTES & DETAILS
SEE SHT C-10 FOR LEFT TURN LANE
SEE SHT C-11 FOR TRAFFIC CONTROL PLAN

NewQuest PROPERTIES™
8807 W. SAM HOUSTON PARKWAY N., SUITE 200
HOUSTON, TEXAS 77040
P. 281.477.4300 F. 281.477.4399

STONE HILL TOWN CENTER
LOT 7 BLK 4
1616 TOWN CENTER
PFLUGERVILLE, TX
78660-7610
A DEVELOPMENT OF:
NEWQUEST PROPERTIES

ISSUE LOG

NO.	DESCRIPTION	DATE
	ISSUE FOR PERMIT	06/15/12
	ISSUED FOR CONSTRUCTION	09/19/12

O'BRIEN
5310 HARVEST HILL RD.
SUITE 136
DALLAS, TEXAS 75230
972 . 788 . 1010
www.obrienarch.com

T.E.A.M.
TEXAS ENGINEERING AND MAPPING
12810 CENTURY DRIVE
STAFFORD, TEXAS 77477
PHONE: (281) 491-2525 FAX: (281) 491-2535

DATE:	JOB:	SCALE:
05-25-12	12024	1"=30'

SHEET NO.

C-3

COPYRIGHT © 2012 OBRIEN THESE DRAWINGS, OR PARTS THEREOF, MAY NOT BE REPRODUCED IN ANY FORM, BY ANY METHOD, FOR ANY PURPOSE, WITHOUT PRIOR WRITTEN CONSENT FROM O'BRIEN

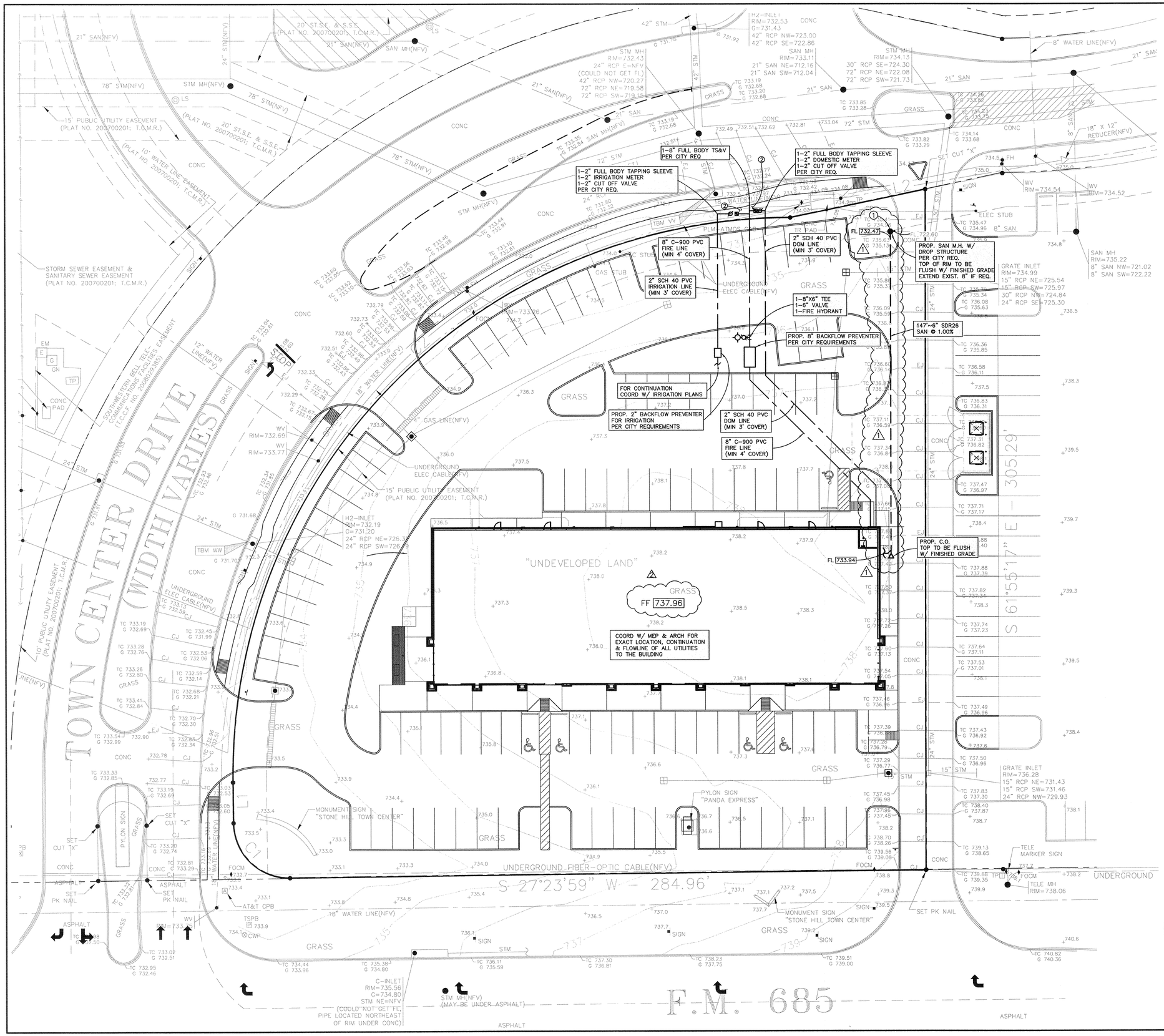

GRAPHIC SCALE

20 0 10 20 40 80

(IN FEET)
1 inch = 20 ft.

NOTE:
SEE SHEET C-0 FOR ADDITIONAL TOPOGRAPHIC INFORMATION AND SHEET C-8 & C-9 FOR GENERAL NOTES & DETAILS.

NOTE: COORD. W/ LANDSCAPE DWGS FOR UNDERGROUND IRRIGATION SYSTEM,

NOTE:
CONTRACTOR TO FIELD VERIFY ALL CRITICAL EXISTING ELEV'S, LOCATION AND FLOWLINES OF EXISTING STORM SEWER, DRAINAGE FACILITIES, WATER AND SANITARY SEWER BEFORE COMMENCING ANY CONSTRUCTION.

OWNER TO OBTAIN ALL PERMITS REQUIRED BY THE CITY OF PFLUGERVILLE AND ALL GOVERNMENTAL AUTHORITIES WITH JURISDICTION, PRIOR TO STARTING CONSTRUCTION OF UTILITY AND/OR DRIVEWAYS WITHIN PUBLIC RIGHTS OF WAY.

NOTE:
CLEAN-OUTS, INLETS AND/OR JUNCTION BOXES LOCATED IN PAVEMENT OR SIDEWALK SHALL HAVE TRAFFIC BEARING LIDS OR GRATES, WHEN LOCATED IN GRASS, THEY SALL HAVE PEDESTRIAN DUTY LIDS OR GRATES.

NOTE:
ALL EXISTING M.H., WATER VALVES, FIRE HYDRANTS & EXISTING STRUCTURES SHALL BE VERTICALLY ADJUSTED TO BE FLUSH /W NEW PVMT ELEVATION OR 3" ABOVE NEW FINISHED GRADE ELEVATIONS AS REQUIRED.

NOTE:
COORDINATE W/ MEP DWGS FOR LOCATION OF ALL GAS & ELECTRICAL SLEEVES

NOTE:
COORD W/ MEP FOR LIGHT STANDARD LOCATIONS TO MAKE SURE NEW WATER LINE DOES NOT CONFLICT WITH NEW LIGHT STANDARDS

NOTE:
COORD W/ MEP FOR EXACT LOCATION & FLOWLINE OF ALL UTILITIES TO THE BUILDING. CONTRACTOR TO VERIFY ALL UTILITIES TO THE BUILDING BEFORE CONSTRUCTION

NOTE:
6" MINIMUM CLEARANCE IS REQUIRED AT POINT OF CROSSING BETWEEN ALL PROPOSED UNDERGROUND UTILITIES

CONTRACTOR TO OBTAIN ALL PERMITS REQUIRED BY "REGULATIONS OF PFLUGERVILLE, TEXAS FOR FLOOD PLAIN MANAGEMENT" PRIOR TO STARTING CONSTRUCTION

CLEAN-OUTS LOCATED IN PAVEMENT AREAS SHALL HAVE TRAFFIC BEARING LIDS.

"ALL RESPONSIBILITY FOR THE ADEQUACY OF THESE PLANS REMAINS WITH THE ENGINEER WHO PREPARED THEM. IN REVIEWING THESE PLANS, THE CITY OF PFLUGERVILLE MUST RELY ONTHE ADEQUACY OF THE WORK OF THE DESIGN ENGINEER"

LEGEND

70.5	EXISTING ELEV.
TG 747.30	TOP OF GRATE ELEV.
FL 741.30	FLOW LINE ELEV.
	SQUARE GRATE INLET
	JUNCTION BOX
	PROP. SANITARY CLEAN OUT

① CONTRACTOR TO FIELD VERIFY EXACT LOCATION & DEPTH OF EXISTING 8" SANITARY & EXTEND & CONNECT PER CITY REQ.

② CONTRACTOR TO USE EXTREME CAUTION WHEN WORKING IN THIS AREA FOR UNIDENTIFIED UNDER GROUND DRY UTILITIES

TEXAS ENGINEERING & MAPPING CO.
REGISTRATION # F-2906

STATE OF TEXAS
CARLOS J. BARILLAS
50474
REGISTERED PROFESSIONAL ENGINEER
7/13/12

C-4 SANITARY & WATER

Scale: 1"=20' JOB NO: 356-123S

SEE SHT C-0 FOR TOPOGRAPHIC SURVEY
SEE SHT C-1 FOR GRADING & DRAINAGE
SEE SHT C-2 FOR STORM SEWER LAYOUT
SEE SHT C-3 FOR DRAINAGE AREA MAP
SEE SHT C-4 FOR SANITARY & WATER
SEE SHT C-5 FOR PAVEMENT LAYOUT
SEE SHT C-6 FOR SWPPP PLAN
SEE SHT C-7 FOR SWPPP NOTES & DETAILS
SEE SHT C-8 FOR NOTES & DETAILS
SEE SHT C-9 FOR NOTES & DETAILS
SEE SHT C-10 FOR LEFT TURN LANE
SEE SHT C-11 FOR TRAFFIC CONTROL PLAN

NewQuest PROPERTIES
8807 W. SAM HOUSTON PARKWAY N., SUITE 200
HOUSTON, TEXAS 77040
P. 281.477.4300 F. 281.477.4399

STONE HILL TOWN CENTER

LOT 7 BLK 4

1616 TOWN CENTER
PFLUGERVILLE, TX
78660-7610

A DEVELOPMENT OF:
NEWQUEST PROPERTIES

ISSUE LOG

NO.	DESCRIPTION	DATE
	ISSUE FOR PERMIT	06/15/12
1	REVISED SANITARY LOCATION	08/02/12
2	RAISED FINISHED FLOOR	08/09/12
	ISSUED FOR CONSTRUCTION	09/19/12

TEXAS ENGINEERING AND MAPPING
12810 CENTURY DRIVE
STAFFORD, TEXAS 77477
PHONE: (281) 491-2525 FAX: (281) 491-2535

DATE:	JOB:	SCALE:
05-25-12	12024	1"=20'

SHEET NO.

C-4

COPYRIGHT © 2012 OBRIEN THESE DRAWINGS, OR PARTS THEREOF, MAY NOT BE REPRODUCED IN ANY FORM, BY ANY METHOD, FOR ANY PURPOSE, WITHOUT PRIOR WRITTEN CONSENT FROM O'BRIEN

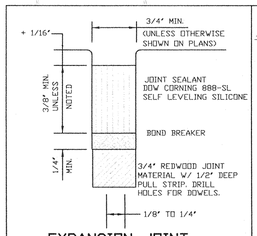

EXPANSION JOINT DETAIL
N.T.S.

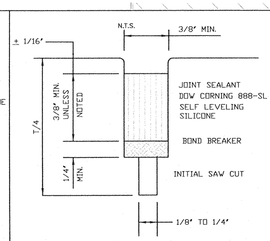

SAW CUT CONTROL JOINT DETAIL
N.T.S.

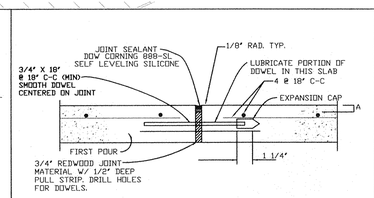

EXPANSION JOINT
N.T.S.

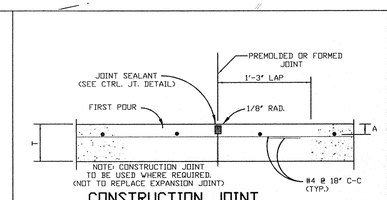

CONSTRUCTION JOINT
N.T.S.

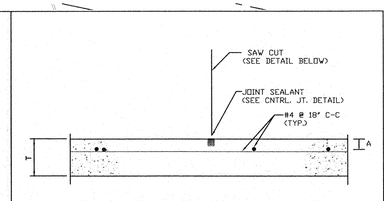

CONTROL JOINT

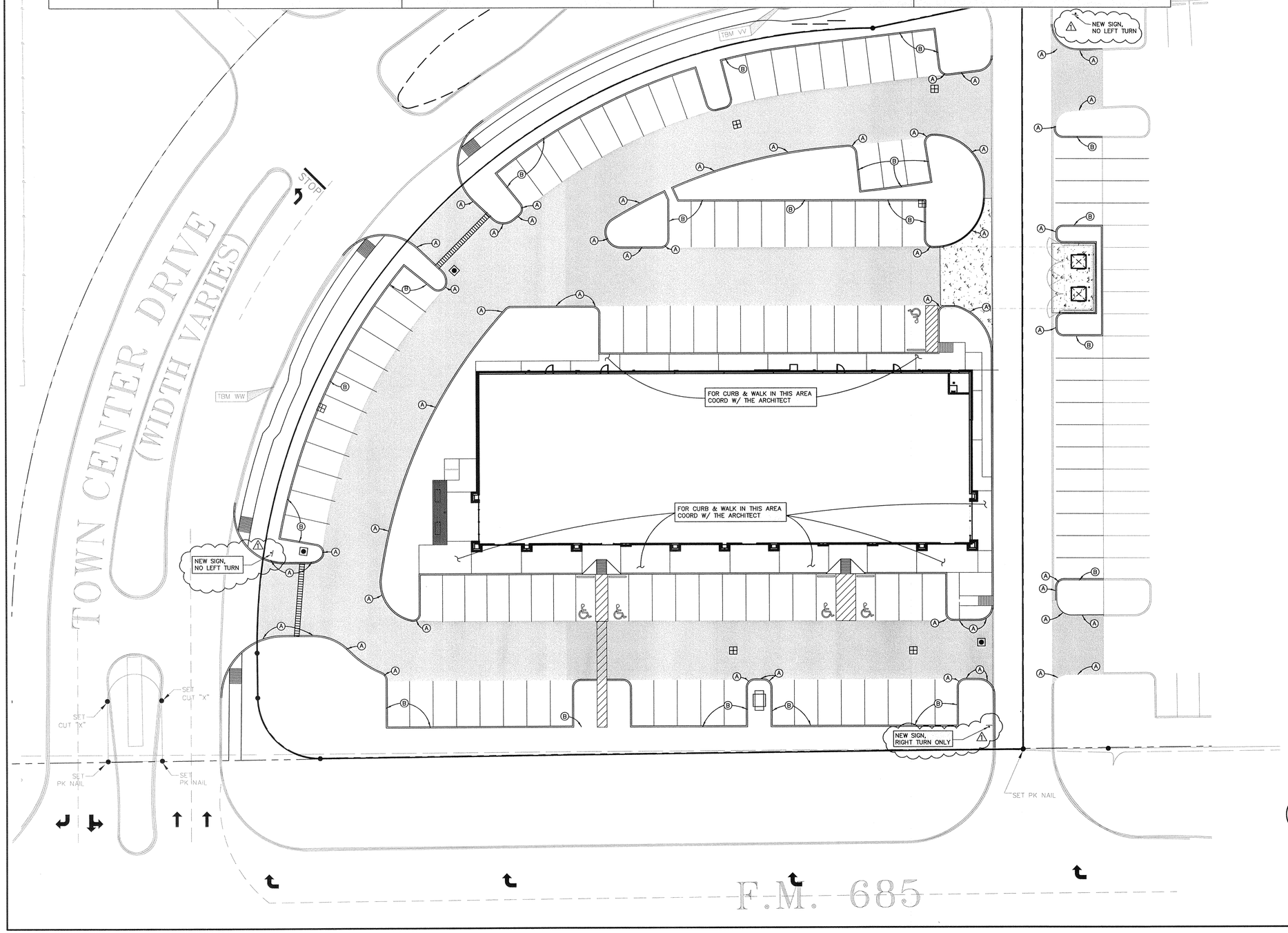

GRAPHIC SCALE

20 0 10 20 40 80

(IN FEET)
1 inch = 20 ft.

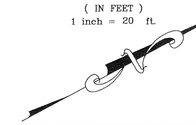

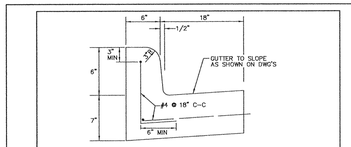

1. PROVIDE EXPANSION JOINTS AT 25' O.C. MAX. AND AT CURVES, TANGENTS, AND CORNERS.
2. BASE OF CURB TO REST ON COMPACTED FILL.
3. SACK FINISH EXPOSED SURFACES.
4. GUTTER CROSS SLOPES TO BE 1"/FT. WHEN DRAINING TOWARD CURB AND 1/8 "/FT WHEN DRAINING AWAY FROM CURB. SEE GRADING PLAN FOR SLOPE DIRECTION.

MONOLITHIC CONCRETE CURB & GUTTER
SCALE : N. T. S.
(A)

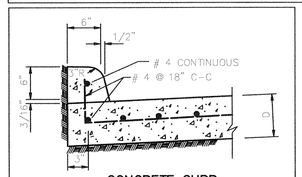

CONCRETE CURB
(B)

NOTE:
CONTRACTOR IS RESPONSIBLE FOR THE PLACEMENT OF EXPANSION & CONTROL JOINTS IN THE PAVING. MATCH EXISTING JOINTS AS REQUIRED (SEE DETAILS FOR JOINT REQUIREMENTS)

"ALL RESPONSIBILITY FOR THE ADEQUACY OF THESE PLANS REMAINS WITH THE ENGINEER WHO PREPARED THEM. IN REVIEWING THESE PLANS, THE CITY OF PFLUGERVILLE MUST RELY ONTHE ADEQUACY OF THE WORK OF THE DESIGN ENGINEER"

NOTE:
REFER TO THIS SHEET FOR PVMT JOINT DETAILS

NOTE:
CONTRACTOR TO INSTALL ISOLATION JOINTS WHERE SIDEWALK MEETS PVMT COORD W/ ARCH DETAIL

NOTE:
COORD W/ ARCH SITE PLAN FOR LIMITS OF ALL PAVING AND CURBS. ANY DESCREPENCIES ARE TO BE COORDINATED W/ ARCH.

NOTE:
LEAVE BREAK OUT IN MONOLITHIC CURB FOR HANDICAP ACCESS ROUTE COORD W/ ARCH

LEGEND

- SQUARE GRATE INLET
- JUNCTION BOX
- 5" THICK CONCRETE PAVEMENT
- 6" THICK CONCRETE PAVEMENT
- 7" THICK CONCRETE PAVEMENT

TEXAS ENGINEERING & MAPPING CO.
REGISTRATION # F-2906

STATE OF TEXAS
CARLOS J. BARILLAS
50474
REGISTERED PROFESSIONAL ENGINEER

(C-5) PAVEMENT LAYOUT

Scale: 1"=20' JOB NO: 356-123S

SEE SHT C-0 FOR TOPOGRAPHIC SURVEY
SEE SHT C-1 FOR GRADING & DRAINAGE
SEE SHT C-2 FOR STORM SEWER LAYOUT
SEE SHT C-3 FOR DRAINAGE AREA MAP
SEE SHT C-4 FOR SANITARY & WATER
SEE SHT C-5 FOR PAVEMENT LAYOUT
SEE SHT C-6 FOR SWPPP PLAN
SEE SHT C-7 FOR SWPPP NOTES & DETAILS
SEE SHT C-8 FOR NOTES & DETAILS
SEE SHT C-9 FOR NOTES & DETAILS
SEE SHT C-10 FOR LEFT TURN LANE
SEE SHT C-11 FOR TRAFFIC CONTROL PLAN

NewQuest PROPERTIES
8807 W. SAM HOUSTON PARKWAY N., SUITE 200
HOUSTON, TEXAS 77040
P. 281.477.4300 F. 281.477.4399

STONE HILL TOWN CENTER

LOT 7 BLK 4

1616 TOWN CENTER
PFLUGERVILLE, TX
78660-7610

A DEVELOPMENT OF:
NEWQUEST PROPERTIES

ISSUE LOG

NO.	DESCRIPTION	DATE
	ISSUE FOR PERMIT	06/15/12
1	ISSUE PER CITY SITE PLAN SUBMITTAL COMMENTS	08/14/12
	ISSUED FOR CONSTRUCTION	09/19/12

TEXAS ENGINEERING AND MAPPING
12810 CENTURY DRIVE
STAFFORD, TEXAS 77477
PHONE: (281) 491-2525 FAX: (281) 491-2535

DATE:	JOB:	SCALE:
05-25-12	12024	1"=20'

SHEET NO.

C-5

COPYRIGHT © 2012 OBRIEN THESE DRAWINGS, OR PARTS THEREOF, MAY NOT BE REPRODUCED IN ANY FORM, BY ANY METHOD, FOR ANY PURPOSE, WITHOUT PRIOR WRITTEN CONSENT FROM O'BRIEN

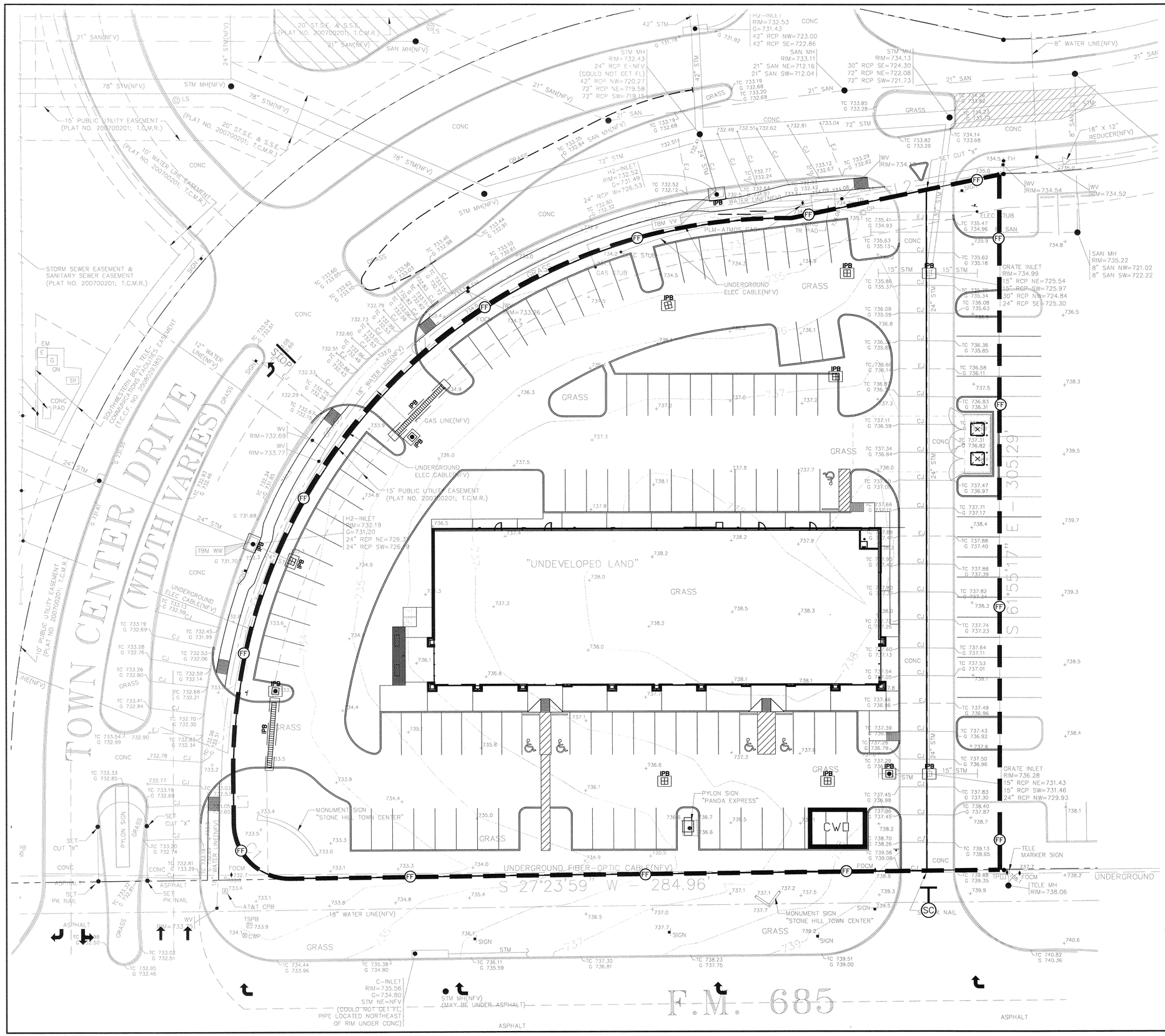

GRAPHIC SCALE

20 0 10 20 40 80

(IN FEET)
1 inch = 20 ft.

SEE REPORT FOR ADDITIONAL INFORMATION

CONTRACTOR TO ENSURE THAT ALL DOWNSTREAM EDGES OF THE PROPERTY ARE PROTECTED WITH AN ENVIROMENTAL CONTROL DEVISE DURING ALL PHASES OF CONSTRUCTION.

"ALL RESPONSIBLIITY FOR THE ADEQUACY OF THESE PLANS REMAINS WITH THE ENGINEER WHO PREPARED THEM. IN REVIEWING THESE PLANS, THE CITY OF PFLUGERVILLE MUST RELY ONTHE ADEQUACY OF THE WORK OF THE DESIGN ENGINEER"

SILT FENCE IS TO BE INSTALLED ON THE IMMEDIATE DOWNSTREAM SIDE OF ANY TEMPORARY STAGING OR SPOILS AREA

LEGEND

SYMBOL	
FF	SILT FENCE
	INLET PROTECTION BARRIER
SC	STABILIZED CONSTRUCTION ENTRANCE
CW	CONCRETE WASHOUT AREA

ALL EXISTING INLETS SHALL BE PROTECTED AT ALL TIMES.

TEXAS ENGINEERING & MAPPING CO.
REGISTRATION # F-2906

STATE OF TEXAS
CARLOS J. BARILLAS
50474
REGISTERED PROFESSIONAL ENGINEER
9/19/12

C-6 SWPPP PLAN

Scale: 1"=20' JOB NO: 356-123S

SEE SHT C-0 FOR TOPOGRAPHIC SURVEY
SEE SHT C-1 FOR GRADING & DRAINAGE
SEE SHT C-2 FOR STORM SEWER LAYOUT
SEE SHT C-3 FOR DRAINAGE AREA MAP
SEE SHT C-4 FOR SANITARY & WATER
SEE SHT C-5 FOR PAVEMENT LAYOUT
SEE SHT C-6 FOR SWPPP PLAN
SEE SHT C-7 FOR SWPPP NOTES & DETAILS
SEE SHT C-8 FOR NOTES & DETAILS
SEE SHT C-9 FOR NOTES & DETAILS
SEE SHT C-10 FOR LEFT TURN LANE
SEE SHT C-11 FOR TRAFFIC CONTROL PLAN

NewQuest PROPERTIES
8807 W. SAM HOUSTON PARKWAY N., SUITE 200
HOUSTON, TEXAS 77040
P. 281.477.4300 F. 281.477.4399

STONE HILL TOWN CENTER

LOT 7 BLK 4

1616 TOWN CENTER
PFLUGERVILLE, TX
78660-7610

A DEVELOPMENT OF:
NEWQUEST PROPERTIES

ISSUE LOG

NO.	DESCRIPTION	DATE
	ISSUE FOR PERMIT	06/15/12
	ISSUED FOR CONSTRUCTION	09/19/12

TEAM

TEXAS ENGINEERING AND MAPPING
12810 CENTURY DRIVE
STAFFORD, TEXAS 77477
PHONE: (281) 491-2525 FAX: (281) 491-2535

DATE:	JOB:	SCALE:
05-25-12	12024	1"=20'

SHEET NO.

C-6

COPYRIGHT © 2012 OBRIEN THESE DRAWINGS, OR PARTS THEREOF, MAY NOT BE REPRODUCED IN ANY FORM, BY ANY METHOD, FOR ANY PURPOSE, WITHOUT PRIOR WRITTEN CONSENT FROM O'BRIEN

GUIDELINES FOR DESIGN AND INSTALLATION OF TEMPORARY EROSION AND SEDIMENTATION CONTROLS

TYPE OF STRUCTURE	REACH LENGTH	MAXIMUM DRAINAGE AREA	SLOPE
SILT FENCE	N/A	2 ACRES	0 – 10%
	200 FEET	2 ACRES	10 – 20%
	100 FEET	1 ACRE	20 – 30%
	50 FEET	1/2 ACRE	> 30%
TRIANGLE FILTER DIKE	100 FEET	1/2 ACRE	< 30% SLOPE
	50 FEET	1/4 ACRE	> 30% SLOPE
ROCK BERM *, **	500 FEET	< 5 ACRES	0 – 10%

* FOR ROCK BERM DESIGN WHERE PARAMETERS ARE OTHER THAN STATED, DRAINAGE AREA CALCULATIONS AND ROCK BERM DESIGN MUST BE SUBMITTED FOR REVIEW.

** HIGH SERVICE ROCK BERMS MAY BE REQUIRED IN AREAS OF ENVIRONMENTAL SIGNIFICANCE AS DETERMINED BY THE CITY ENGINEER.

ISSUE DATE: FEBRUARY 2005 | REVISIONS | DATE | APPROVED | DRAWN | SCALE: N.T.S.

CITY OF PFLUGERVILLE

TEMPORARY EROSION AND SEDIMENTATION GUIDELINES

CONSTRUCTION STANDARDS AND DETAILS

DWG. # EC-01 | ECD1.DWG

NOTE: THIS SECTION IS INTENDED TO ASSIST THOSE PERSONS PREPARING WATER POLLUTION ABATEMENT PLANS (WPAP) OR STORM WATER POLLUTION PREVENTION PLANS (SW3P) THAT COMPLY WITH FEDERAL, STATE AND/OR LOCAL STORM WATER REGULATIONS. THESE SUGGESTED DETAILS AND SPECIFICATIONS ARE GENERALLY INTENDED FOR HEAVY CIVIL PROJECTS IN PUBLIC RIGHTS-OF-WAY OR EASEMENTS.

1. THE CONTRACTOR SHALL INSTALL AND MAINTAIN EROSION/SEDIMENTATION CONTROLS AND TREE/NATURAL AREA PROTECTIVE FENCING PRIOR TO ANY SITE PREPARATION WORK (CLEARING, GRUBBING, GRADING, OR EXCAVATION). CONTRACTOR TO REMOVE EROSION/SEDIMENTATION CONTROLS AT THE COMPLETION OF PROJECT AND GRASS RESTORATION.
2. THE PLACEMENT OF EROSION/SEDIMENTATION CONTROLS SHALL BE IN ACCORDANCE WITH THE APPROVED EROSION AND SEDIMENTATION CONTROL PLAN AND WATER POLLUTION ABATEMENT PLAN. DEVIATIONS FROM THE APPROVED PLAN MUST BE SUBMITTED TO AND APPROVED BY THE OWNER'S REPRESENTATIVE.
3. ALL PLANTING SHALL BE DONE BETWEEN MAY 1 AND SEPTEMBER 15 EXCEPT AS SPECIFICALLY AUTHORIZED IN WRITING. IF PLANTING IS AUTHORIZED TO BE DONE OUTSIDE THE DATES SPECIFIED, THE SEED SHALL BE PLANTED WITH THE ADDITION OF WINTER FESCUE (VENTUCKY 31) AT A RATE OF 100lb/ACRE. GRASS SHALL BE COMMON BERMUDA GRASS, HULLED, MINIMUM 85% PURE LIVE SEED. ALL GRASS SEED SHALL BE FREE FROM NOXIOUS WEED, GRADE "A" RECENT CROP, RECLEANED AND TREATED WITH APPROPRIATE FUNGICIDE AT TIME OF MIXING. SEED SHALL BE FURNISHED IN SEALED, STANDARD CONTAINERS WITH DEALER'S GUARANTEED ANALYSIS.
4. ALL DISTURBED AREAS TO BE RESTORED AS NOTED IN THE WATER POLLUTION ABATEMENT PLAN.
5. THE PLANTED AREA SHALL BE IRRIGATED OR SPRINKLED IN A MANNER THAT WILL NOT ERODE THE TOPSOIL, BUT WILL SUFFICIENTLY SOAK THE SOIL TO A DEPTH OF FOUR (4) INCHES. THE IRRIGATION SHALL OCCUR AT 10-DAY INTERVALS DURING THE FIRST TWO MONTHS TO INSURE GERMINATION AND ESTABLISHMENT OF THE GRASS . RAINFALL OCCURRENCES OF 1/2 INCH OR GREATER SHALL POSTPONE THE WATERING SCHEDULE ONE WEEK.
6. RESTORATION SHALL BE ACCEPTABLE WHEN THE GRASS HAS GROWN AT LEAST 1-1/2 INCHES HIGH WITH 95 % COVERAGE, PROVIDED NO BARE SPOTS LARGER THAN 25 SQUARE FEET EXIST.
7. A MINIMUM OF FOUR (4) INCHES OF TOPSOIL SHALL BE PLACED IN ALL AREAS DISTURBED BY CONSTRUCTION.
8. THE CONTRACTOR SHALL HYDROMULCH OR SOD (AS SHOWN ON PLANS) ALL EXPOSED CUTS AND FILLS UPON COMPLETION OF CONSTRUCTION.
9. EROSION AND SEDIMENTATION CONTROLS SHALL BE INSTALLED OR MAINTAINED IN A MANNER WHICH DOES NOT RESULT IN SOIL BUILDUP WITHIN TREE DRIPLINE.
10. TO AVOID SOIL COMPACTION, CONTRACTOR SHALL NOT ALLOW VEHICULAR TRAFFIC, PARKING, OR STORAGE OF EQUIPMENT OR MATERIALS IN THE TREE DRIPLINE AREAS.
11. WHERE A FENCE IS CLOSER THAN FOUR (4) FEET TO A TREE TRUNK, PROTECT THE TRUNK WITH STRAPPED-ON PLANKING TO A HEIGHT OF EIGHT (8) FEET (OR TO THE LIMITS OF LOWER BRANCHING) IN ADDITION TO THE FENCING.
12. TREES SHALL BE REMOVED IN A MANNER WHICH DOES NOT IMPACT TREES TO BE PRESERVED.
13. ANY ROOT EXPOSED BY CONSTRUCTION ACTIVITY SHALL BE PRUNED FLUSH WITH THE SOIL. BACKFILL ROOT AREAS WITH GOOD QUALITY TOPSOIL AS SOON AS POSSIBLE. IF EXPOSED ROOT AREAS ARE NOT BACKFILLED WITHIN TWO DAYS, COVER THEM WITH ORGANIC MATERIAL IN A MANNER WHICH REDUCES SOIL TEMPERATURE AND MINIMIZES WATER LOSS DUE TO EVAPORATION.
14. CONTRACTOR SHALL PRUNE VEGETATION TO PROVIDE CLEARANCE FOR STRUCTURES, VEHICULAR TRAFFIC, AND EQUIPMENT BEFORE DAMAGE OCCURS (RIPPING OF BRANCHES, ETC.). ALL FINISHED PRUNING SHALL BE DONE ACCORDING TO RECOGNIZED, APPROVED STANDARDS OF THE INDUSTRY (REFERENCE THE "NATIONAL ARBORIST ASSOCIATION PRUNING STANDARDS FOR SHADE TREES").
15. THE CONTRACTOR SHALL TO INSPECT THE CONTROLS AT WEEKLY INTERVALS AND AFTER EVERY RAINFALL EXCEEDING 1/4 INCH TO VERIFY THAT THEY HAVE NOT BEEN SIGNIFICANTLY DISTURBED. ANY ACCUMULATED SEDIMENT AFTER A SIGNIFICANT RAINFALL SHALL BE REMOVED AND PLACED IN THE OWNER DESIGNATED SPOIL DISPOSAL SITE. THE CONTRACTOR SHALL CONDUCT PERIODIC INSPECTIONS OF ALL EROSION/SEDIMENTATION CONTROLS AND SHALL MAKE ANY REPAIRS OR MODIFICATIONS NECESSARY TO ASSURE CONTINUED EFFECTIVE OPERATION OF EACH DEVICE.
16. WHERE THERE IS TO BE AN APPROVED GRADE CHANGE, IMPERMEABLE PAVING SURFACE, TREE WELL, OR OTHER SUCH SITE DEVELOPMENT IMMEDIATELY ADJACENT TO A PROTECTED TREE, ERECT THE FENCE APPROXIMATELY TWO TO FOUR FEET (2'-4') BEHIND THE AREA IN QUESTION.
17. NO ABOVE- AND/OR BELOW GROUND TEMPORARY FUEL STORAGE FACILITIES SHALL BE STORED ON THE PROJECT SITE.
18. IF EROSION AND SEDIMENTATION CONTROL SYSTEMS ARE EXISTING FROM PRIOR CONTRACTS, OWNER'S REPRESENTATIVE AND THE CONTRACTOR SHALL EXAMINE THE EXISTING EROSION AND SEDIMENTATION CONTROL SYSTEMS FOR DAMAGE PRIOR TO CONSTRUCTION. ANY DAMAGE TO PREEXISTING EROSION AND SEDIMENTATION CONTROLS NOTED SHALL BE REPAIRED AT OWNER'S EXPENSE.
19. INTENTIONAL RELEASE OF VEHICLE OR EQUIPMENT FLUIDS ONTO THE GROUND IS NOT ALLOWED. CONTAMINATED SOIL RESULTING FROM ACCIDENTAL SPILL SHALL BE REMOVED AND DISPOSED OF PROPERLY.

ISSUE DATE: FEBRUARY 2005 | REVISIONS | DATE | APPROVED | DRAWN | SCALE: N.T.S.

CITY OF PFLUGERVILLE

EROSION/SEDIMENTATION AND TREE PROTECTION NOTES

CONSTRUCTION STANDARDS AND DETAILS

DWG. # EC-01A | ECD1.DWG

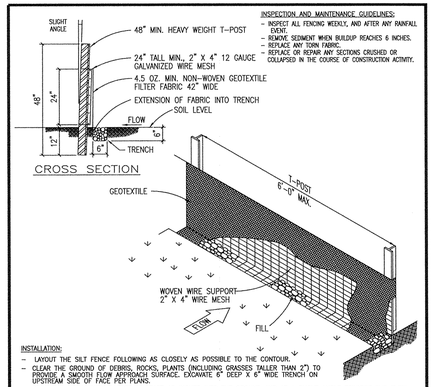

INSPECTION AND MAINTENANCE GUIDELINES:
- INSPECT ALL FENCING WEEKLY, AND AFTER ANY RAINFALL EVENT.
- REMOVE SEDIMENT WHEN BUILDUP REACHES 6 INCHES.
- REPLACE ANY TORN FABRIC.
- REPLACE OR REPAIR ANY SECTIONS CRUSHED OR COLLAPSED IN THE COURSE OF CONSTRUCTION ACTIVITY.

INSTALLATION:
- LAYOUT THE SILT FENCE FOLLOWING AS CLOSELY AS POSSIBLE TO THE CONTOUR.
- CLEAR THE GROUND OF DEBRIS, ROCKS, PLANTS (INCLUDING GRASSES TALLER THAN 2") TO PROVIDE A SMOOTH FLOW APPROACH SURFACE. EXCAVATE 6" DEEP X 6" WIDE TRENCH ON UPSTREAM SIDE OF FACE PER PLANS.
- DRIVE THE HEAVY DUTY T-POST AT LEAST 12 INCHES INTO THE GROUND AND AT A SLIGHT ANGLE TOWARDS THE FLOW.
- ATTACH THE 2" X 4" 12 GAUGE WELDED WIRE MESH TO THE T-POST WITH 11 1/2 GAUGE GALVANIZED T-POST CLIPS. THE TOP OF THE WIRE TO BE 24" ABOVE GROUND LEVEL. THE WELDED WIRE MESH TO BE OVERLAPPED 6" AND TIED AT LEAST 6 TIMES WITH HOG RINGS.
- THE SILT FENCE SHALL BE INSTALLED WITH A SKIRT A MINIMUM OF 6" WIDE PLACED ON THE UPHILL SIDE OF THE FENCE INSIDE EXCAVATED TRENCH. THE FABRIC TO OVERLAP THE TOP OF THE WIRE BY 1".
- ANCHOR THE SILT FENCE BY BACKFILLING WITH EXCAVATED DIRT AND ROCKS (NOT LARGER THAN 2").
- GEOTEXTILE SPLICES SHALL BE A MINIMUM OF 18" WIDE ATTACHED IN AT LEAST 6 PLACES. SPLICES IN CONCENTRATED FLOW AREAS WILL NOT BE ACCEPTED.
- SILT FENCE SHALL BE REMOVED WHEN THE SITE IS COMPLETELY STABILIZED SO AS NOT TO BLOCK OR IMPEDE STORM FLOW OR DRAINAGE.

ISSUE DATE: FEBRUARY 2005 | REVISIONS | DATE | APPROVED | DRAWN | SCALE: N.T.S.

CITY OF PFLUGERVILLE

SILT FENCE DETAIL

CONSTRUCTION STANDARDS AND DETAILS

DWG. # EC-02 | ECD2.DWG

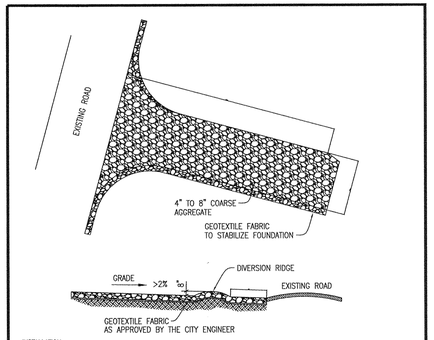

INSTALLATION:
- CLEAR THE AREA OF DEBRIS, ROCKS OR PLANTS THAT WILL INTERFERE WITH INSTALLATION.
- GRADE THE AREA FOR THE ENTRANCE TO FLOW BACK ON TO THE CONSTRUCTION SITE.
- PLACE GEOTEXTILE FABRIC AS APPROVED BY THE CITY ENGINEER.
- PLACE ROCK AS APPROVED BY THE CITY ENGINEER.

INSPECTIONS AND MAINTENANCE GUIDELINES:
- THE ENTRANCE SHALL BE MAINTAINED IN A CONDITION, WHICH WILL PREVENT TRACKING OR FLOWING OF SEDIMENT ONTO PUBLIC RIGHTS-OF-WAY. THIS MAY REQUIRE PERIODIC TOP DRESSING WITH ADDITIONAL STONE AS CONDITIONS DEMAND AND REPAIR AND/OR CLEANOUT OF ANY MEASURES USED TO TRAP SEDIMENT.
- ALL SEDIMENT SPILLED, DROPPED, WASHED OR TRACKED ON TO PUBLIC RIGHTS-OF-WAY SHALL BE REMOVED IMMEDIATELY BY CONTRACTOR.
- WHEN NECESSARY, WHEELS SHALL BE CLEANED TO REMOVE SEDIMENT PRIOR TO ENTRANCE ONTO PUBLIC RIGHTS-OF-WAY.
- WHEN WASHING IS REQUIRED, IT SHALL BE DONE ON AN AREA STABILIZED WITH CRUSHED STONE THAT DRAINS INTO AN APPROVED SEDIMENT TRAP OR SEDIMENT BASIN.
- ALL SEDIMENT SHALL BE PREVENTED FROM ENTERING ANY STORM DRAIN, DITCH OR WATER COURSE BY USING APPROVED METHODS.

ISSUE DATE: FEBRUARY 2005 | REVISIONS | DATE | APPROVED | DRAWN | SCALE: N.T.S.

CITY OF PFLUGERVILLE

STABILIZED CONSTRUCTION ENTRANCE

CONSTRUCTION STANDARDS AND DETAILS

DWG. # EC-06 | ECD6.DWG

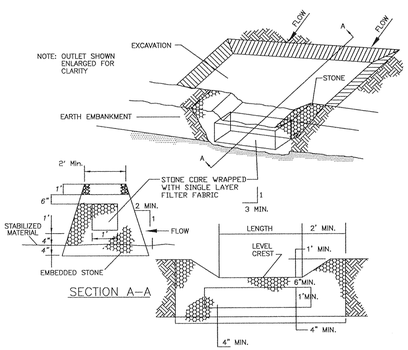

GENERAL NOTES:

1. SPECIFY DIMENSION LIMITS OF EXCAVATION AND OUTLET LENGTH AND HEIGHT ON THIS SHEET OR THE CONSTRUCTION DRAWINGS.
2. WRAP STONE CORE WITH ONLY ONE LAYER OF GEOTEXTILE FILTER FABRIC FENCE.
3. MAINTAIN A MINIMUM OF 6 INCHES BETWEEN THE TOP OF CORE MATERIAL AND THE TOP OF THE STONE OUTLET, A MINIMUM OF 4 INCHES BETWEEN BOTTOM OF CORE MATERIAL AND EXISTING GROUND, AND A MINIMUM OF 1 FOOT BETWEEN THE TOP OF THE STONE OUTLET AND THE TOP OF THE EMBANKMENT.
4. EMBED ROCK A MINIMUM OF 4 INCHES INTO THE EXISTING GROUND.
5. PONDING OF SEDIMENT-LADEN RUNOFF IN SEDIMENT BASIN ACCOMPLISHED BY EMBANKMENT OR EXCAVATION DEPENDING ON TERRAIN. BASIN TYPE AND DIMENSION ARE SHOWN ON THIS SHEET OR REFERENCED ON CONSTRUCTION DRAWINGS.
6. OUTLET ONTO STABILIZED AREA.
7. USE ONLY CLEAN, HARD, DURABLE STONE FREE FROM ADHERENT COATINGS, SALT, ALKALI, DIRT, CLAY, LOAM, SHALE, SOFT OR FLAKY MATERIALS, OR ORGANIC AND INJURIOUS MATTER.
8. USE ONLY OPEN-GRADED ROCK WITH MOST OF THE FINES REMOVED. UNLESS OTHERWISE SPECIFIED ON PLANS AND DRAWINGS, USE ROCK WITH A MINIMUM 3-INCH DIAMETER AND A VOLUME OF LESS THAN ONE-HALF CUBIC FOOT.
9. REMOVE SEDIMENT DEPOSITS WHEN DESIGN VOLUME IS REDUCED BY ONE-THIRD OR SEDIMENT LEVEL IS ONE FOOT BELOW THE PRINCIPAL SPILLWAY CREST, WHICHEVER IS LESS.

SEDIMENT BASIN WITH STONE OUTLET

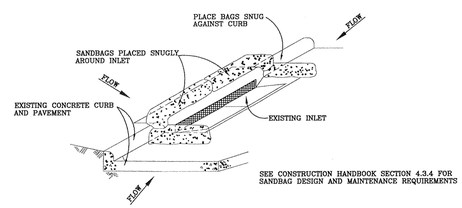

GENERAL NOTES:

1. BAGS OR WATTLES CAN BE USED FOR THIS APPLICATION.
2. PROVIDE WOVEN OR UNWOVEN GEOTEXTILE FILTER FABRIC FOR BAGS.
3. PROVIDE COARSE SAND AND AGGREGATE MIX FOR FILL MATERIAL FOR BAGS. USE ONLY PARTICLES CONSISTING OF CLEAN, HARD, DURABLE MATERIALS FREE FROM ADHERENT COATINGS, SALT, ALKALI, DIRT, CLAY, LOAM, SHALE, SOFT OR FLAKY MATERIALS, OR ORGANIC AND INJURIOUS MATTER.
4. REMOVE SEDIMENT DEPOSIT WHEN THE SEDIMENT HAS ACCUMULATED TO ONE-THIRD THE HEIGHT OF THE BARRIER.

INLET PROTECTION BARRIERS FOR STAGE II INLETS

IPB

SYMBOL

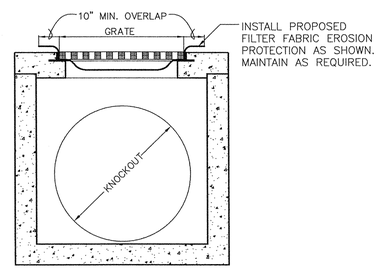

PROPOSED / EXISTING INLET

INLET PROTECTION BARRIER

CITY OF PFLUGERVILLE
EROSION AND SEDIMENTATION CONTROL NOTES

1. EROSION CONTROL MEASURES, SITE WORK, AND RESTORATION WORK SHALL BE IN ACCORDANCE WITH THE CITY OF PFLUGERVILLE'S SUBDIVISION CODE AND CONSTRUCTION STANDARDS MANUAL, EXCEPT AS NOTED BELOW AND APPROVED BY CITY COUNCIL.
2. ALL SLOPES SHALL BE SODDED OR SEEDED WITH THE APPROPRIATE GRASS, GRASS MIXTURES, OR GROUND COVER SUITABLE TO THE AREA AND SEASON TO WHICH THEY ARE APPLIED.
3. SILT FENCES, ROCK BERMS AND SIMILARLY RECOGNIZED TECHNIQUES AND MATERIALS SHALL BE EMPLOYED DURING CONSTRUCTION TO PREVENT POINT SOURCE SEDIMENTATION LOADING OF DOWNSTREAM FACILITIES. SUCH INSTALLATION SHALL BE REGULARLY INSPECTED BY THE CITY OF PFLUGERVILLE FOR EFFECTIVENESS. ADDITIONAL MEASURES MAY BE REQUIRED IF, IN THE OPINION OF THE CITY ENGINEER, THEY ARE WARRANTED.
4. ALL TEMPORARY EROSION CONTROL MEASURES SHALL NOT BE REMOVED UNTIL FINAL INSPECTION AND APPROVAL OF THE PROJECT BY THE ENGINEER.
5. IT SHALL BE THE RESPONSIBILITY OF THE CONTRACTOR TO MAINTAIN ALL TEMPORARY EROSION CONTROL STRUCTURES AND TO REMOVE EACH STRUCTURE AS APPROVED BY THE ENGINEER.

TEXAS ENGINEERING & MAPPING CO.
REGISTRATION # F-2906

STATE OF TEXAS
CARLOS J. BARILLAS
50474
REGISTERED PROFESSIONAL ENGINEER

9/19/12

SWPPP NOTES & DETAILS

C-7

Scale: 1"=20' JOB NO: 356-123S

SEE SHT C-0 FOR TOPOGRAPHIC SURVEY
SEE SHT C-1 FOR GRADING & DRAINAGE
SEE SHT C-2 FOR STORM SEWER LAYOUT
SEE SHT C-3 FOR DRAINAGE AREA MAP
SEE SHT C-4 FOR SANITARY & WATER
SEE SHT C-5 FOR PAVEMENT LAYOUT
SEE SHT C-6 FOR SWPPP PLAN
SEE SHT C-7 FOR SWPPP NOTES & DETAILS
SEE SHT C-8 FOR NOTES & DETAILS
SEE SHT C-9 FOR NOTES & DETAILS
SEE SHT C-10 FOR LEFT TURN LANE
SEE SHT C-11 FOR TRAFFIC CONTROL PLAN

NewQuest PROPERTIES
8807 W. SAM HOUSTON PARKWAY N., SUITE 200
HOUSTON, TEXAS 77040
P. 281.477.4300 F. 281.477.4399

STONE HILL TOWN CENTER
LOT 7 BLK 4
1616 TOWN CENTER
PFLUGERVILLE, TX
78660-7610
A DEVELOPMENT OF:
NEWQUEST PROPERTIES

ISSUE LOG

NO.	DESCRIPTION	DATE
	ISSUE FOR PERMIT	06/15/12
	ISSUED FOR CONSTRUCTION	09/19/12

O'BRIEN
5310 HARVEST HILL RD.
SUITE 136
DALLAS, TEXAS 75230
972 . 788 . 1010
www.obrienarch.com

TEXAS ENGINEERING AND MAPPING
12810 CENTURY DRIVE
STAFFORD, TEXAS 77477
PHONE: (281) 491-2525 FAX: (281) 491-2535

DATE:	JOB:	SCALE:
05-25-12	12024	1"=20'

SHEET NO.

C-7

COPYRIGHT © 2012 OBRIEN THESE DRAWINGS, OR PARTS THEREOF, MAY NOT BE REPRODUCED IN ANY FORM, BY ANY METHOD, FOR ANY PURPOSE, WITHOUT PRIOR WRITTEN CONSENT FROM O'BRIEN

CONSTRUCTION NOTES:

1. Storm sewer pipe, in public R.O.W. shall be reinforced concrete meeting A.S.T.M., C-76, Class III. Bedding, backfilling and installation of pipe and construction of appurtenances shall be in accordance with City of Pflugerville standards.

2. Storm sewer shall be ADS N-12 Pipe (Corrugated Polyethylene Pipe) per A.S.T.M. F-405, A.S.T.M. F-667, A.S.T.M. D-2321, AASHTO M-294. Bedding, backfilling and installation of pipe and construction of appurtenances shall be in accordance with City of Pflugerville, Specifications for Sewer Construction, including all amendments and revisions, thereto.

3. Sanitary sewer shall be PVC (Poly-Vinyl Chloride) pipe meeting A.S.T.M. Specifications, D-3034-73 and having a S.D.R. of 26, or as noted. Bedding, backfilling and installation of pipe and construction of appurtenances shall be in accordance with City of Pflugerville standards.

4. Water lines shall be PVC (Poly-Vinyl Chloride) pipe conforming to A.W.W.A. C-900 PVC, Class 150 or Schedule 40 PVC or per City of Pflugerville requirements.

5. Contractor shall provide adequate thrust blocking to withstand test pressure as required by City of Pflugerville.

6. All utilities presented on these drawings are shown at the approximate locations based on the best available information. the Contractor shall field determine the exact locations prior to commencing construction. he shall be fully responsible for any and all damages caused by his failure to exactly locate and maintain these underground utilities.

7. Contractor shall uncover existing utilities at all points of crossing to determine if conflict exists before commencing any construction. Notify the Engineer at once of any conflict.

8. Where concrete curb or walk is indicated, elevation shall be 6 inches above top of pavement elevation shown. Coordinate with architectural site plan.

9. All fill, compaction and subgrade preparation shall be in accordance with soil report specifications.

10. All sewers under or within one (1) foot of proposed or future pavement shall be backfilled with 1-1/2 sack cement stabilized sand to within one (1) foot of subgrade. See city details for additional information

11. The work area shall be barricaded and illuminated during darkness and periods of inactivity, when in an area of direct public access.

12. Contractor shall provide sheeting, shoring and bracing as necessary to protect workmen and existing utilities during all phases of construction.

13. Utilities are to be taken to within five (5) feet of building. See plumbing sheets indicated for continuation of service connections into building.

14. Contractor shall be responsible for protecting, maintaining, and restoring all drainage system.

15. All finished grades shall vary uniformly between finished elevations shown.

16. Some of the existing underground utilities shown hereon have not been field verified.

17. Contractor is to notify all utility companies to verify location and depth of all existing utility lines.

18. Contractor to obtain all permits required by all governing agencies.

19. Contractor to co-ordinate with architects and M.E.P. drawings for connection and location of all downspouts and all plumbing utilities.

21. Overhead lines may exist on the property. We have not attempted to mark those lines since they are clearly visible, but you should locate them prior to beginning any construction. Texas law, Section 752, Health & Safety Code, forbids all activities in which persons or things MAY come within six (6) feet of live overhead high voltage lines. Parties responsible for the work,including contractors, are l legally responsible for the safety of construction workers under this law. This law carries both criminal and civil liability. To arrange for lines to be turned off or moved, TXU.

21. Contractor shall provide and install traffic control devices in conformance with Part VI of the Texas Manual on Uniform Traffic Control Devices (Texas M.U.T.C.D. most recent edition with revisions) during construction.

23. Caution: UNDERGROUND GAS FACILITIES
Gas main lines (to include Unit Gas Transmission, and/or Industrial Gas Supply Corporation where applicable) are shown in an aprroximate location ONLY. Service lines are usually not shown. The contractor shall contact the Utility Coordinating Committee a minimum of 48 hours prior to construction to have main and service lines field located.

* When GAS pipe line markings are NOT visible, call local GAS Company for status of line location request before excavation begins.
* When excavating within eighteen inches (18") of the indicated location of Centerpoint Energy Entex facilities, all excavation must be accomplished using NON-mechanized excavating procedures.
* When UTILITY facilities are exposed, sufficient support must be provided to the facilities to prevent excessive stress on the piping.

23. Telephone Co. utilities may exist in street right of way. The contractor shall determine the exact location before commencing work. He agrees to be fully responsible for any and all damages which might be occasioned by his failure to exactly locate and preserve these underground utilities.

24. All existing power poles, light standards, signs, etc. which affect the proposed construction, shall be removed and/or relocated as required whether shown on drawings or not, and coordinate with architect/owner.

25. The Contractor shall provide a trench safety system to meet appropriate requirements established in Occupational Safety and Health Administration (OSHA) Safety & Health Regulations, 29 CFR 1926, Subpart P - Excavations, Trenching and Shoring, and OSHA s proposed standards on trenching, excavation published in Volume 52, No. 72 of the Federal Register, April 15, 1987, Pages 12288-12339. Should the referenced OSHA standards be modified or amended, the more stringent requirements shall apply.

26. Contractor shall provide sheeting, shoring and bracing as necessary to protect workmen and existing utilities during all phases of construction.

27. The contractor shall provide for a minimum of 6-inches of clearance at all sanitary sewer and water main crossings, and 6-inches of minimum clearance at all sanitary sewer and storm sewer crossings.

NOTE:
ALL FILL COMPACTION AND SUBGRADE PREPARATION SHALL BE IN ACCORDANCE WITH SOILS REPORT SPECIFICATIONS.

CITY OF PFLUGERVILLE
WATER AND WASTEWATER NOTES

1. ALL WATER LINE AND WASTEWATER CONSTRUCTION, TESTING, AND MATERIALS SHALL BE IN COMPLIANCE WITH THE CITY OF PFLUGERVILLE'S SUBDIVISION CODE AND CONSTRUCTION STANDARDS MANUAL, EXCEPT AS NOTED BELOW AND APPROVED BY CITY COUNCIL:
2. PIPE MATERIAL FOR WATER MAINS SHALL BE PVC (AWWA C-900, MIN. CLASS 200), OR DUCTILE IRON (AWWA C-100, MIN. CLASS 50)
3. ALL VALVES SHALL BE LOCATED OPPOSITE THE TANGENT POINT ON CURB RETURNS OF THE STREET CURB RADIUS, PER CITY OC PFLUGERVILLE STANDARDS, UNLESS OTHERWISE NOTED.
4. PIPE MATERIAL FPR PRESSURE WASTEWATER MAINS SHALL BE PVC (ASTM D22241 CALSS 200 SDR 21), OR DUCTILE IRON (AWWA C-100, MIN. CLASS 50). PIPE MATERIAL FOR GRAVITY WASTEWATER MAINS SHALL BE PVC (ASTM D2241 OR D3034, MAX. SDR 35), DUCTILE IRON (AWWA C-100, MIN. CLASS 50), OR CONCRETE (ASTM C-76) WITH O-RING JOIINT DESIGN.
5. DEPTH OF COVER FOR ALL LINES SHALL BE A MINIMUM OF 36".
6. ALL FIRE HYDRANT LEADS SHALL BE DUCTILE IRON (AWWA C-100, MIN. CLASS 50) AND LOCATED AS SHOWN ON THE PLANS.
7. ALL CAST IRON PIPE AND FITTINGS SHALL BE WRAPED WITH MINIMUM 8-MIL POLYETHYLENE.
8. MINIMUM CLEARANCE BETWEEN WATERLINES AND SEWER LINES IS 9 FEET MEASURED BETWEEN OUTSIDE OF PIPE DIAMETERS, OR APPROPRIATE MEASURES ARE THEN TAKEN TO MEET REQUIREMENTS OF TNRCC REGULATIONS.
9. THE CONTRACTOR SHALL CONTACT THE CITY OF PFLUGERVILLE AT LEAST 48 HOURS PRIOR TO CONNECTING TO EXISTING WATER LINES.
10. ALL SEWER LINE MANHOLES SHALL BE 4' DIAMETER, NON-CONCENTRIC REINFORCED CONCRETE SEWER PIPE, CALSS IV WITH MINIMUM 5" THICK WALLS, CAST IRON FRAMES, AND COVERS SHALL CONFORM TO APPROXIMATELY 300 POUNDS. MANHOLE COVERS TO BE VULCAN FOUNDRY NUMBER 38 OR 42 OR EQUAL. COVERS ARE TO BE MARKED "SANITARY SEWER".
11. LINE FLUSHING OR ANY ACTIVITY USING LARGE QUANTITIES OF WATER MUST BE SCHEDULED WITH THE WATER AND WASTEWATER SUPERINTENDENT OF THE CITY OF PFLUGERVILLE. THE STREET SECTIONS ARE TO BE CONTRUCTED AS FOLLOWS:
12. THE CONTRACTOR, AT HIS EXPENSE, SHALL PERFORM STERILIZATION OF ALL POTABLE WATER LINES CONSTRUCTED AND SHALL PROVIDE ALL EQUIPMENT (INCLUDING TEST GUAGES), SUPPLIES (INCLUDING CONCENTRATED CHLORINE DISINFECTANT MATERIAL), AND NECESSARY LABOR REQUIRED FOR THE STERILIZATION PROCEDURE. THE STERILIZATION PROCEDURE SHALL BE MONITORED BY THE CITY ENGINEER AND THE CITY OF PFLUGERVILLE SEWER PERSONEL. WATER SAMPLES WILL BE COLLECTED BY THE ENGINEER AND BE SUBMITTED TO A CERTIFIED LABORATORY FOR TESTING WITH THE RESULTS BEING SENT TO THE CITY OF PFLUGERVILLE TO VERIFY EACH TREATED LINE HAS ATTAINED AN INITIAL CHLORINE CONCENTRATION OF 50 PPM.
13. SAMPLING TAPS SHALL BE BROUGHT UP TO 3 FEET ABOVE GRADE AND BE EASILY ACCESSIBLE. AT THE CONTRACTOR'S REQUEST , AND IN HIS PRESENCE, SAMPLES FOR BACTERIOLOGICAL TESTING WILL BE COLLECTED BY THE ENGINEER NOT LESS THAN 24 HOURS AFTER THE TREATED LINE HAS BEEN FLUSHED OF THE CONCENTRATED CHLORINE SOLUTION AND CHARGED WITH WATER APPROVED BY THE CITY. THE CONTRACTOR SHALL SUPPLY A CHECK OR MONEY ORDER, PAYABLE TO THE TEXAS DEPARTMENT OF HEALTH, TO COVER THE FEE CHARGED FOR TESTING EACH WATER SAMPLE.
14. THE CONTRACTOR AT HIS EXPENSE, SHALL PERFORM QUALITY TESTING FOR ALL WASTEWATER PIPE INSTALLED AND PRESSURE PIPE HYDROSTATIC DESIGN OF ALL WATER LINES CONSTRUCTED AND SHALL PROVIDE ALL EQUIPMENT (INCLUDING PUMPS AND GUAGES), SUPPLIES AND LABOR NECESSARY TO PERFORM THE TESTS. QUALITY AND PRESSURE TESTING SHALL BE MONITORED BY THE ENGINEER OR HIS REPRESENTATIVE.
15. THE CONTRACTOR SHALL PROVIDE THE ENGINEER OR HIS REPRESENTATIVE NO LESS THAN 24 HOUR NOTICE PRIOR TO PERFORMING STERILIZATION, QUALITY TESTING OR PRESSURE TESTING.
16. THE CONTRACTOR SHALL NOT OPEN OR CLOSE ANY VALVES UNLESS AUTHORIZED BY THE CITY OF PFLUGERVILLE.
17. ALL VALVE BOXES AND COVERS SHALL BE CAST IRON.
18. ALL WATER SERVICE, WASTEWATER SERVICE AND VALVE LOCATIONS SHALL BE APPROXIMATELY MARKED AS FOLLOWS:

WATER SERVICE	"W" ON TOP OF CURB
VALVE	"V" ON TOP OF CURB
WASTEWATER SERVICE	"S" ON TOP OF CURB

19. THE CONTRACTOR SHALL CONTACT THE AUSTIN AREA "ONE CALL" SYSTEM AT 811 FOR EXISTING UTILITY LOCATIONS PRIOR TO ANY EXCAVATIONIN ADVANCE OF CONSTRUCTION. THE CONTRACTOR SHALL VERIFY THE LOCATIONS OF ALL UTILITIES TO BE EXTENDED, TIED TO, ALTERED OR SUBJECT TO CHANGE/INCONVENIENCED BY CONSTRUCTION OPERATIONS. THE CITY OF PFLUGERVILLE WATER AND WASTEWATER MAINTENANCE RESPONSIBILITY ENDS AT ROW/EASEMENT LINE.
20. ALL MATERIAL TESTS, INCLUDING SOIL DENSITY TESTS AND RELATED SOIL ANALYSIS, SHALL BE ACCOMPLISHED BY AN INDEPENDENT LABORATORY FUNDED BY THE DEVELOPER IN ACCORDANCE WITH THE SPECIFICATIONS.
21. DEFLECTION TEST: DEFLECTION TESTS SHALL BE PERFORMED ON ALL FLEXIBLE AND SEMI-RIGID PIPE. THE TEST SHALL BE CONDUCTED AFTER THE FINAL BACKFILL HAS BEEN IN PLACE FOR AT LEAST THIRTY (30) DAYS. NO PIPE SHALL EXCEED A DEFLECTION OF 5%. THE DEFLECTION TEST IS TO BE RUN USING A BALL OR MANDREL. IT SHALL HAVE A DIAMETER EQUAL TO 95% OF THE INSIDE DIAMETER OF THE PIPE. THE TEST SHALL BE PERFORMED WITHOUT MECHANICAL PULLING DEVICES.

CITY OF PFLUGERVILLE
EROSION AND SEDIMENTATION CONTROL NOTES

1. EROSION CONTROL MEASURES, SITE WORK, AND RESTORATION WORK SHALL BE IN ACCORDANCE WITH THE CITY OF PFLUGERVILLE'S SUBDIVISION CODE AND CONSTRUCTION STANDARDS MANUAL, EXCEPT AS NOTED BELOW AND APPROVED BY CITY COUNCIL:
2. ALL SLOPES SHALL BE SODDED OR SEEDED WITH THE APPROPRIATE GRASS, GRASS MIXTURES, OR GROUND COVER SUITABLE TO THE AREA AND SEASON TO WHICH THEY ARE APPLIED.
3. SILT FENCES, ROCK BERMS AND SIMILARLY RECOGNIZED TECHNIQUES AND MATERIALS SHALL BE EMPLOYED DURING CONSTRUCTION TO PREVENT POINT SOURCE SEDIMENTATION LOADING OF DOWNSTREAM FACILITIES. SUCH INSTALLATION SHALL BE REGULARLY INSPECTED BY THE CITY OF PFLUGERVILLE FOR EFFECTIVENESS. ADDITIONAL MEASURES MAY BE REQUIRED IF, IN THE OPINION OF THE CITY ENGINEER, THEY ARE WARRANTED.
4. ALL TEMPORARY EROSION CONTROL MEASURES SHALL NOT BE REMOVED UNTIL FINAL INSPECTION AND APPROVAL OF THE PROJECT BY THE ENGINEER.
5. IT SHALL BE THE RESPONSIBILITY OF THE CONTRACTOR TO MAINTAIN ALL TEMPORARY EROSION CONTROL STRUCTURES AND TO REMOVE EACH STRUCTURE AS APPROVED BY THE ENGINEER.

CITY OF PFLUGERVILLE
STANDARD UNDERGROUND UTILITY NOTES

1. ALL ELECTRICAL, CABLE TELEVISION AND TELEPHONE SUPPORT EQUIPMENT (TRANSFORMERS, AMPLIFIERS, SWITCHING DEVICES, ETC.) NECESSARY FOR UNDERGROUND INSTALLATIONS IN SUBDIVISIONS SHALL BE PAD MOUNTED OR PLACED UNDERGROUND IN A PUBLIC UTILITY EASEMENT RATHER THAN A RIGHT-OF-WAY.
2. WHERE ELECTRICAL SERVICE IS TO BE PLACED UNDERGROUND, ELECTRIC UTILITY SERVICE LINE FOR THE STREET OR SITE LIGHTING SHALL ALSO BE PLACED UNDERGROUND.
3. ALL TELEPHONE AND CABLE TELEVISION UTILITY LINES AND ALL ELECTRIC UTILITY LATERAL AND SERVICE LINES AND WIRES SHALL BE PLACED UNDERGROUND EXCEPT AS OTHERWISE HEREIN PROVIDED.

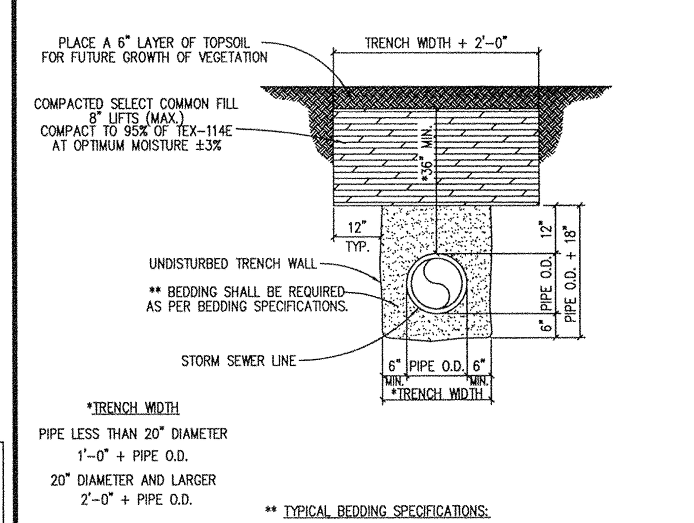

*TRENCH WIDTH
PIPE LESS THAN 20" DIAMETER
1'-0" + PIPE O.D.
20" DIAMETER AND LARGER
2'-0" + PIPE O.D.

** TYPICAL BEDDING SPECIFICATIONS:

SIEVE SIZE	3/8" F % RETAINED	1/2" D % RETAINED	WASHED GRAVEL % RETAINED
1/2"	0	0	0
3/8"	0-2	5-25	-
4m	40-85	80-100	-
10m	95-100	96-100	-
3/4"	-	-	100

ISSUE DATE: FEBRUARY 2005 | REVISIONS | DATE | APPROVED | DRAWN | SCALE: N.T.S.
CITY OF PFLUGERVILLE
CONCRETE TRENCH CAP DETAIL FOR STORM SEWER
CONSTRUCTION STANDARDS AND DETAILS
DWG. # SD-39 | SD39.DWG

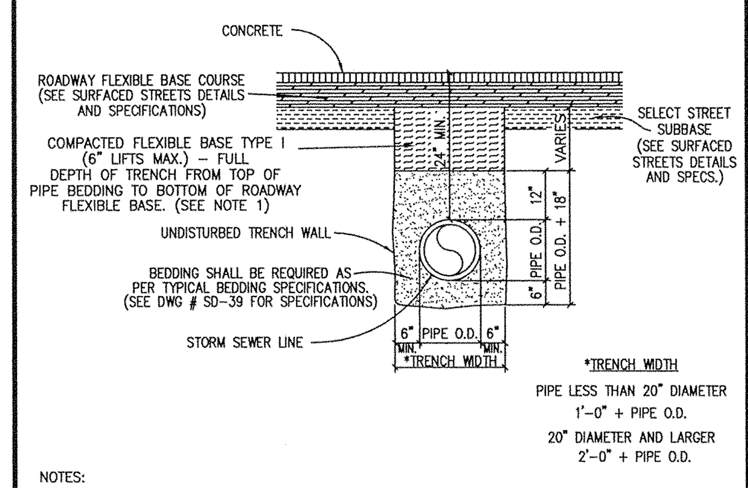

*TRENCH WIDTH
PIPE LESS THAN 20" DIAMETER
1'-0" + PIPE O.D.
20" DIAMETER AND LARGER
2'-0" + PIPE O.D.

NOTES:
1. A MINIMUM OF ONE DENSITY TEST SHALL BE TAKEN EVERY TWO HUNDRED FIFTY (250) FEET FOR EACH SIX (6) INCH LIFT OF BASE. PROCTORS FOR MATERIALS USED IN BACKFILLING SHALL BE OBTAINED BY A CERTIFIED LABORATORY. DENSITY TESTS SHALL BE CONDUCTED BY A CERTIFIED LABORATORY OR THE PERMITTEE'S CONSULTANTS. THE PERCENTAGE OF MAXIMUM DENSITY REQUIRED SHALL BE 100 % OF THE MAXIMUM DENSITY AS DETERMINED BY TEX-113E AT OPTIMUM MOISTURE ±3%. ALL DENSITY TESTS SHALL BE COMPLETED AND ACCEPTED ON EACH LAYER PRIOR TO ADDITIONAL BACKFILLING. A COPY OF ALL COMPLETED AND ACCEPTED DENSITY TESTS SHALL BE FURNISHED TO CITY OF PFLUGERVILLE.
2. THESE SPECIFICATIONS MAY BE SUPERSEDED BY THE GOVERNING AGENCY.
3. CONTRACTOR OR ENGINEER MAY USE FLOWABLE BACKFILL AS AN ALTERNATE BACKFILL MATERIAL (SEE C9 FLOWABLE BACKFILL FOR THE SPECIFICATION).
4. FLEXIBLE BASE TYPE I:
TxDOT TYPE A - GRADE 1 CRUSHED LIMESTONE BASE COMPACTED TO 100% OF THE MAXIMUM DENSITY AS DETERMINED BY TEX-113E AT OPTIMUM MOISTURE ±3%. PROCTOR TO BE PROVIDED BY THE CONTRACTOR TO THE CITY INSPECTOR.

ISSUE DATE: FEBRUARY 2005 | REVISIONS | DATE | APPROVED | DRAWN | SCALE: N.T.S.
CITY OF PFLUGERVILLE
TRENCH AND EMBEDMENT DETAIL UNDER PROPOSED ROADWAY FOR STORM SEWER
CONSTRUCTION STANDARDS AND DETAILS
DWG. # SD-41 | SD41.DWG

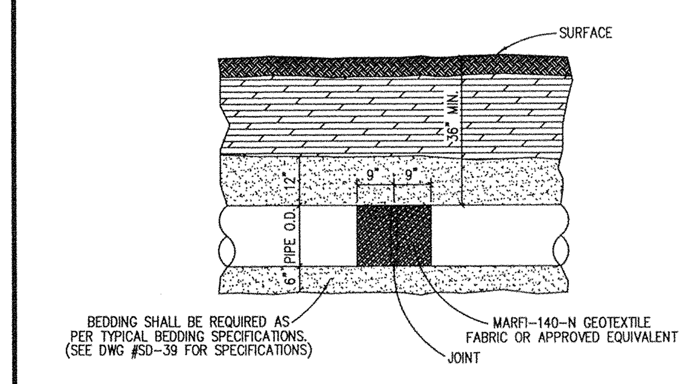

NOTES
1. PIPE SHALL BE REINFORCED CONCRETE PIPE CLASS III UNLESS THE DEPTH OF PIPE REQUIRES A STRONGER CLASS. WHERE LESS THAN 36" OF COVER IS PROVIDED, CLASS IV REINFORCED CONCRETE PIPE SHALL BE USED.
2. ALL FITTINGS AND WYES SHALL BE MANUFACTURED AND NOT CONSTRUCTED ON THE PROJECT WITHOUT PRIOR APPROVAL FROM THE CITY.
3. ALL JOINTS THAT ARE NOT SEALED WITH A WATERTIGHT CONNECTION SHALL BE WRAPPED WITH MARFI-140-N GEOTEXTILE FABRIC OR APPROVED EQUIVALENT. THE JOINT SHALL BE WRAPPED WITH 18" WIDE FABRIC SPLITTING THE JOINT.

ISSUE DATE: FEBRUARY 2005 | REVISIONS | DATE | APPROVED | DRAWN | SCALE: N.T.S.
CITY OF PFLUGERVILLE
TRENCH AND EMBEDMENT DETAIL (PROFILE) FOR STORM SEWER
CONSTRUCTION STANDARDS AND DETAILS
DWG. # SD-42 | SD42.DWG

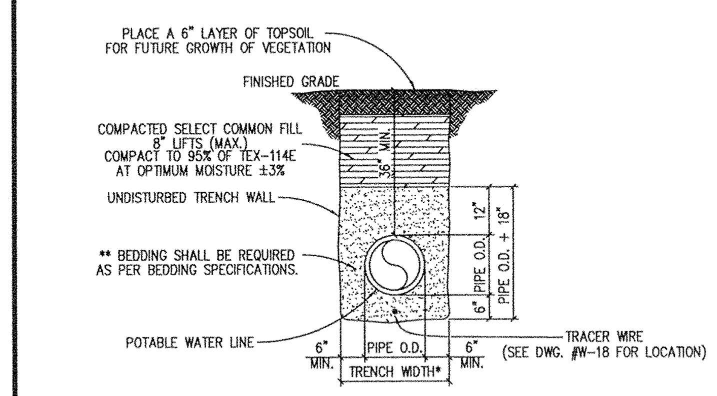

*TRENCH WIDTHS
PIPE LESS THAN 20" DIAMETER 1'-0" + PIPE O.D.
20" DIAMETER PIPE AND LARGER 2'-0" + PIPE O.D.

** TYPICAL BEDDING SPECIFICATIONS:

SIEVE SIZE	3/8" F % RETAINED	1/2" D % RETAINED	WASHED GRAVEL % RETAINED
1/2"	0	0	0
3/8"	0-2	5-25	-
4m	40-85	80-100	-
10m	95-100	96-100	-
3/4"	-	-	100

ISSUE DATE: FEBRUARY 2005 | REVISIONS | DATE | APPROVED | DRAWN | SCALE: N.T.S.
CITY OF PFLUGERVILLE
TRENCH AND EMBEDMENT DETAIL UNDER NON-PAVED AREAS
CONSTRUCTION STANDARDS AND DETAILS
DWG. # W-02 | W02.DWG

* TRENCH WIDTHS
PIPE LESS THAN 20" DIAMETER 1'-0" + PIPE O.D.
20" DIAMETER PIPE AND LARGER 2'-0" + PIPE O.D.

NOTE: WHERE 36" MINIMUM COVER CAN NOT BE OBTAINED OR DUE TO POTENTIAL SURFACE LOADING THE CITY MAY REQUIRE A CAP TO BE INSTALLED.

** TYPICAL BEDDING SPECIFICATIONS:

SIEVE SIZE	3/8" F % RETAINED	1/2" D % RETAINED	WASHED GRAVEL % RETAINED
1/2"	0	0	0
3/8"	0-2	5-25	-
4m	40-85	80-100	-
10m	95-100	96-100	-
3/4"	-	-	100

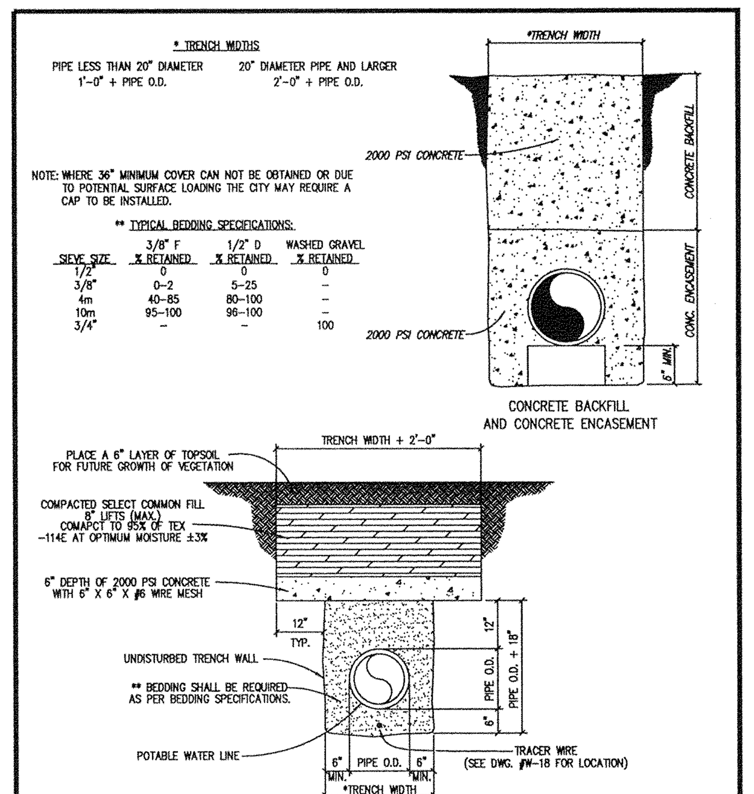

ISSUE DATE: FEBRUARY 2005 | REVISIONS | DATE | APPROVED | DRAWN | SCALE: N.T.S.
CITY OF PFLUGERVILLE
CONCRETE TRENCH CAP DETAIL
CONSTRUCTION STANDARDS AND DETAILS
DWG. # W-02A | W02.DWG

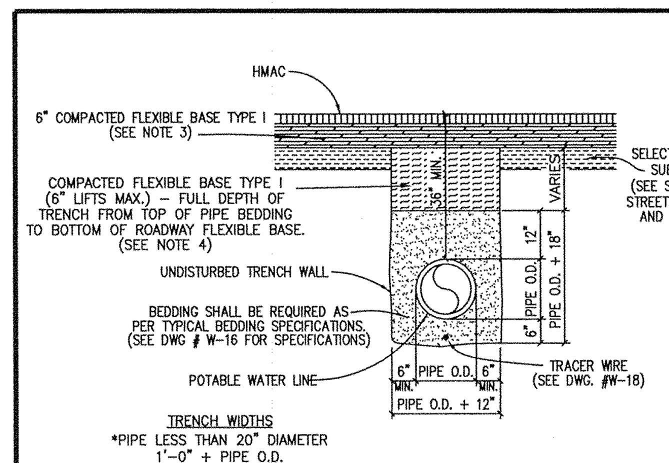

TRENCH WIDTHS
*PIPE LESS THAN 20" DIAMETER
1'-0" + PIPE O.D.
*20" DIAMETER AND LARGER
2'-0" + PIPE O.D.

NOTES:
1. A MINIMUM OF ONE DENSITY TEST SHALL BE TAKEN EVERY TWO HUNDRED FIFTY (250) FEET FOR EACH SIX (6) INCH LIFT OF BASE. PROCTORS FOR MATERIALS USED IN BACKFILLING SHALL BE OBTAINED BY A CERTIFIED LABORATORY. DENSITY TESTS SHALL BE CONDUCTED BY A CERTIFIED LABORATORY OR THE PERMITTEE'S CONSULTANTS. THE PERCENTAGE OF MAXIMUM DENSITY REQUIRED SHALL BE 100 % OF THE MAXIMUM DENSITY AS DETETMINED BY TEX-113E AT OPTIMUM MOISTURE ±3%. ALL DENSITY TESTS SHALL BE COMPLETED AND ACCEPTED ON EACH LAYER PRIOR TO ADDITIONAL BACKFILLING. A COPY OF ALL COMPLETED AND ACCEPTED DENSITY TESTS SHALL BE FURNISHED TO CITY OF PFLUGERVILLE.
2. THESE SPECIFICATIONS MAY BE SUPERSEDED BY THE GOVERNING AGENCY.
3. FLEXIBLE BASE TYPE I: (ROADWAY BASE)
TxDOT TYPE A - GRADE 1 CRUSHED LIMESTONE BASE COMPACTED TO 100% OF MAXIMUM DENSITY AS DETERMINED BY TEX-113E AT OPTIMUM MOISTURE ±3%. PROCTER TO BE PROVIDED BY THE CONTRACTOR TO THE CITY INSPECTOR.
4. CONTRACTOR OR ENGINEER MAY USE FLOWABLE BACKFILL AS AN ALTERNATE BACKFILL MATERIAL (SEE C9 FLOWABLE BACKFILL FOR THE SPECIFICATION).

ISSUE DATE: FEBRUARY 2005 | REVISIONS | DATE | APPROVED | DRAWN | SCALE: N.T.S.
CITY OF PFLUGERVILLE
TRENCH AND EMBEDMENT DETAIL UNDER PROPOSED ROADWAY
CONSTRUCTION STANDARDS AND DETAILS
DWG. # W-22 | W22.DWG

ALL CAST IRON FRAME AND GRATE TO BE H-20 RATED.

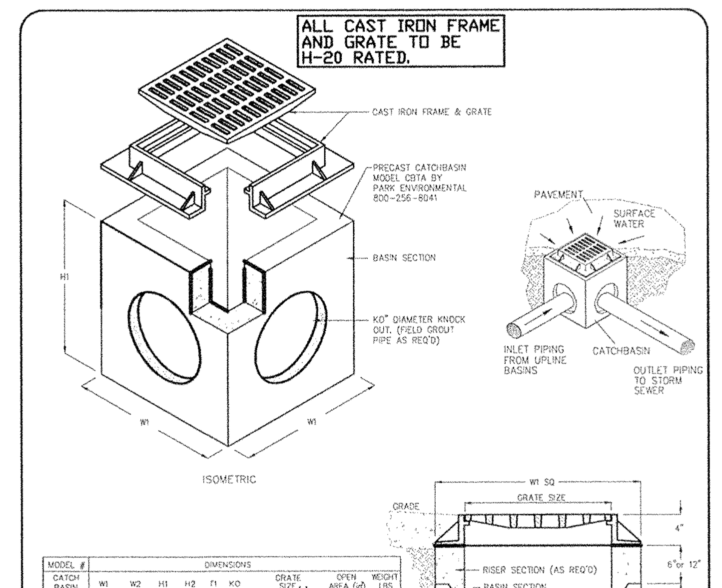

MODEL # CATCH BASIN	W1	W2	H1	H2	T1	KO	GRATE SIZE	OPEN AREA (in²)	WEIGHT LBS
CBTA18	24"	16"	34"	30"	4"	15"	19s"x19s"x1I"	171	1,100
CBTA24	32"	22"	41"	36"	5"	22"	25s"x25s"x1I"	300	2,300
CBTA30	42"	30"	42"	36"	6"	30"	31s"x31s"x1I"	475	3,700
CBTA36	48"	36"	42"	36"	6"	32"	37s"x37s"x1I"	725	4,600
CBTA48	60"	48"	54"	48"	6"	32"	37s"x37s"x1I"	1210	8,500

1. FOR ADA COMPLIANT GRATES, SPECIFY SUFFIX ADA, IE CBTA24-ADA
2. GRATING IS AVAILABLE WITH SPECIAL LETTERING

SPECIFICATIONS
CONCRETE : Class 1 concrete with of design strength of 4500 PSI at 28 days. Unit is of monolithic construction at floor and first stage of wall with sectional riser to required depth. Rated for H-20 Loading.
REINFORCEMENT: Grade 60 reinforced with steel rebar to conform to ASTM A615 on required centers or equal.
C.I. CASTINGS: Cast Iron frames and grates are manufactured of grey cast iron conforming to ASTM A48-76 Class 30.

PARK ENVIRONMENTAL EQUIPMENT 800-256-8041 www.park-USA.com
"Expect the Best"
TYPE-A GRATE INLET SIZES 18" THRU 48"
NONE | 01/05 | CBTA1848 | A

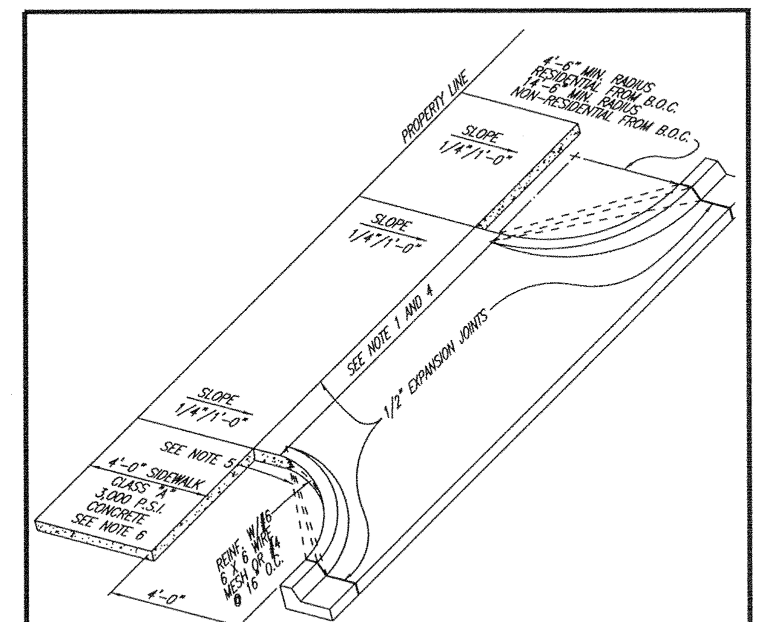

NOTES:
1. MAXIMUM WIDTH OF APPROACH SHALL BE 24'-0" FOR RESIDENTIAL, 35'-0" FOR NON-RESIDENTIAL.
2. DRIVEWAY PERMITS TO BE ACQUIRED FROM CITY INSPECTION OFFICE.
3. SPACING OF DRIVEWAY CUTS SHALL BE AS REQUIRED BY THE CITY'S SUBDIVISION AND SITE DEVELOPMENT CODES.
4. MINIMUM WIDTH OF APPROACH SHALL BE 10'-0" FOR RESIDENTIAL AND 15'-0" FOR NON-RESIDENTIAL.
5. LINEAR "RADIUS" AT CORNERS, PERMITTED FOR "SINGLE FAMILY" OR "TWO FAMILY" RESIDENTIAL DRIVEWAY APPROACH.
6. SIDEWALK LOCATION TO BE APPROVED BY CITY ENGINEER PRIOR TO FINAL DESIGN.

ISSUE DATE: FEBRUARY 2005 | REVISIONS | DATE | APPROVED | DRAWN | SCALE: N.T.S.
CITY OF PFLUGERVILLE
CONCRETE DRIVEWAY APPROACH TYPICAL
CONSTRUCTION STANDARDS AND DETAILS
DWG. #SD-15 | SD16.DWG

CITY OF PFLUGERVILLE
GENERAL CONSTRUCTION NOTES

1. ALL CONSTRUCTION SHALL BE IN ACCORDANCE WITH THE CITY OF PFLUGERVILLE'S SUBDIVISION CODE AND CONSTRUCTION STANDARDS MANUAL, EXCEPT AS NOTED BELOW AND APPROVED BY CITY COUNCIL:
2. PRIOR TO BEGINNING CONSTRUCTION, THE OWNER OR HIS REPRESENTATIVE SHALL CONVENE A PRE-CONSTRUCTION CONFERENCE BETWEEN THE CITY OF PFLUGERVILLE, DESIGN ENGINEER, CONTRACTOR(S), COUNTY ENGINEER(IF APPLICABLE), TEXAS DEPARTMENT OF TRANSPORTATION (IF APPROPRIATE), ALL UTILITY SERVICE PROVIDERS, AND ANY OTHER AFFECTED PARTIES. THE CITY ENGINEER SHALL BE NOTIFIED AT LEAST 48 HOURS PRIOR TO THE PROPOSED MEETING TIME.
3. THE CONTRACTOR SHALL GIVE THE CITY OF PFLUGERVILLE AT LEAST 48 HOURS NOTICE PRIOR TO BEGINNING EACH PHASE OF CONSTRUCTION.
4. BARRICADES, BUILT TO CITY OF AUSTIN SPECIFICATIONS SHALL BE CONSTRUCTED AT THE END OF ALL DEAD-END-STREETS AND AS NECESSARY DURING CONSTRUCTION TO MANTAIN JOB SAFETY.
5. ANY EXISTING PAVEMENT, CURBS, SIDEWALKS OR OTHER PUBLIC INFRASTRUCTURE DAMAGED OR REMOVED WILL BE REPLACED BY THE CONTRACTOR ATHIS EXPENSE BEFORE ACCEPTANCE OF THE SUBDIVISION.
6. BENCHMARKS: (TWO REQUIRED)
7. IF BLASTING IS PROPOSED BY THE CONTRACTOR, A BLASTING PERMIT SHALL BE SECURED PRIOR TO COMMENCEMENT OF ANY BLASTING.
8. USE ONE CALL UTILITY SYSTEM: DIAL 811 48 HOURS BEFORE YOU DIG.
9. ALL STORM SEWER SHALL BE CLASS III RCP UNLESS NOTED OTHERWISE.
10. ALL FIRE HYDRANTS SHALL BE NATIONAL STANDARD HOSE THREAD.
11. THE SUBGRADE MATERIAL IN (NAME OF SUBDIVISION) WAS TESTED BY (NAME OF PROFESSIONAL SOIL LAB) ON (DAY/MONTH/YEAR) AND THE STREET SECTION DESIGNED IN ACCORDANCE WITH GENERALLY ACCEPTED CRITERIA. THE STREET SECTIONS ARE TO BE CONTRUCTED AS FOLLOWS:

STREET	ROW	BASE THICKNESS	ASPHALT THICKNESS
(LIST STREETS)			

12. MANHOLE FRAMES, COVERS AND WATER VALVES WILL BE RAISED TO FINISHED GRADE AT THE OWNER'S EXPENSE BY A QUALIFIED CONTRACTOR WITH CITY INSPECTION. ALL UTILITY ADJUSTMENTS IN THE ROADWAY SHALL BE COMPLETED PRIOR TO FINAL PAVING CONSTRUCTION.
13. AT INTERSECTIONS WITH VALLEY DRAINAGE, THE CROWN OF THE INTERSECTING STREETS WILL CULMINATE IN A DISTANCE OF 40' FROM THE INTERSECTING CURB LINE UNLESS OTHERWISE NOTED. INLETS ON THE INTERSECTING STREET SHALL NOT BE CONSTRUCTED WITHIN 40' OF THE VALLEY DRAINAGE.
14. AT THE INTERSECTION OF TWO 44' STREETS, THE CROWNS OF THE INTERSECTING STREETS WILL CULMINATE IN A DISTANCE OF 40' FROM THE INTERSECTING CURB LINE UNLESS OTHERWISE NOTED.
15. PRIOR TO FINAL ACCEPTANCE OF A STREET OUTSIDE THE CITY LIMITS, STREET NAME SIGNS CONFORMING TO COUNTY STANDARDS SHALL BE INSTALLED BY THE DEVELOPER.
16. PROJECTS USING LIME STABILIZSTION SHALL BE REQUIRED TO PLACE LIME IN SLURRY FORM.

SEQUENCE OF CONSTRUCTION

A PRECONSTRUCTION MEETING MUST BE HELD WITH THE CITY INSPECTOR AND ALL OTHER APPLICABLE PARTIES PRIOR TO BEGINNING CONSTRUCTION CITY INSPECTOR (512) 990-6345
THE CITY OF PFLUGERVILLE CONSTRUCTION INSPECTOR SHALL BE NOTIFIED 24 HOURS IN ADVANCE OF INSTALLING EROSION CONTROL MEASURES
INSTALL EROSION CONTROL MEASURES
PREPARE SITE DIRT WORK
INSTALL UNDERGROUND UTILITIES
INSTALL BUILDING PAD & BUILDING
INSTALL PAVING
INSTALL LANDSCAPING
ENGINEERS CONCURENCE LETTER AT THE END OF PROJECT

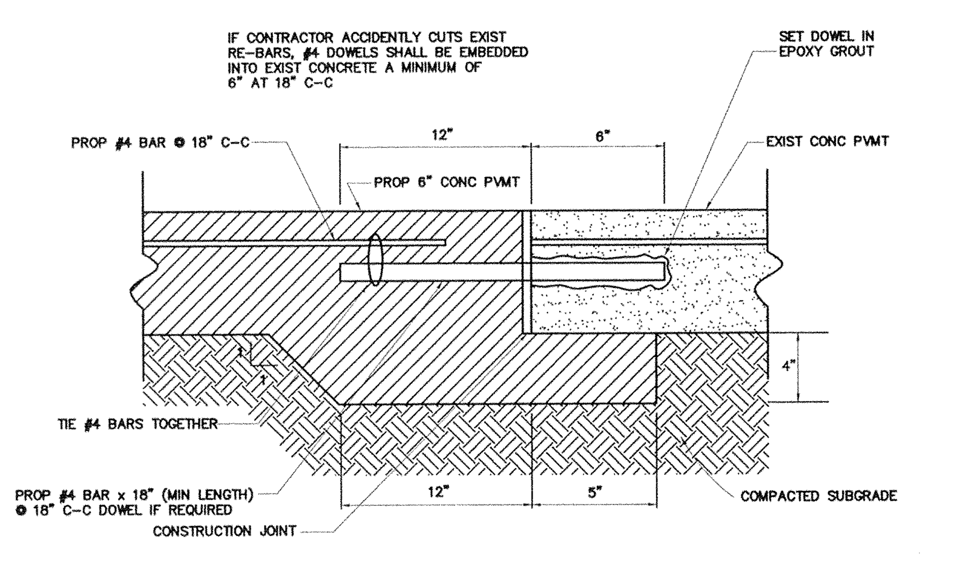

PROP. CONCRETE TO EXISTING CONCRETE
N.T.S.

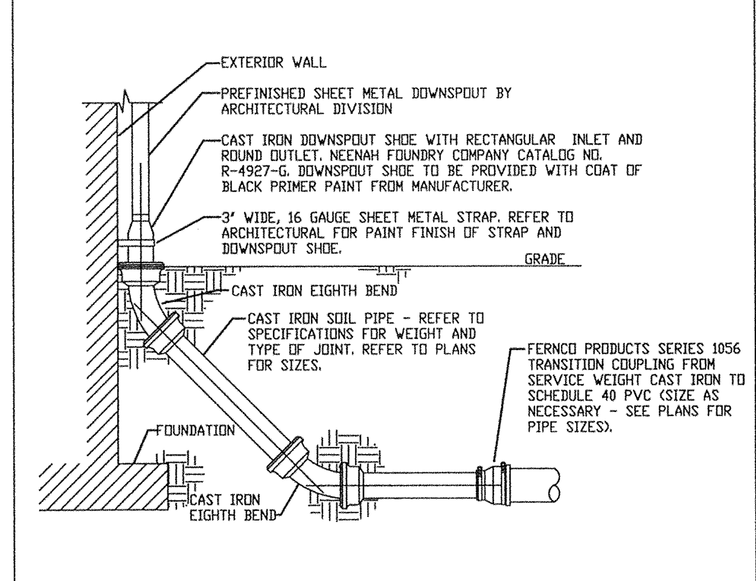

DOWNSPOUT SHOE CONNECTION
SCALE: NONE

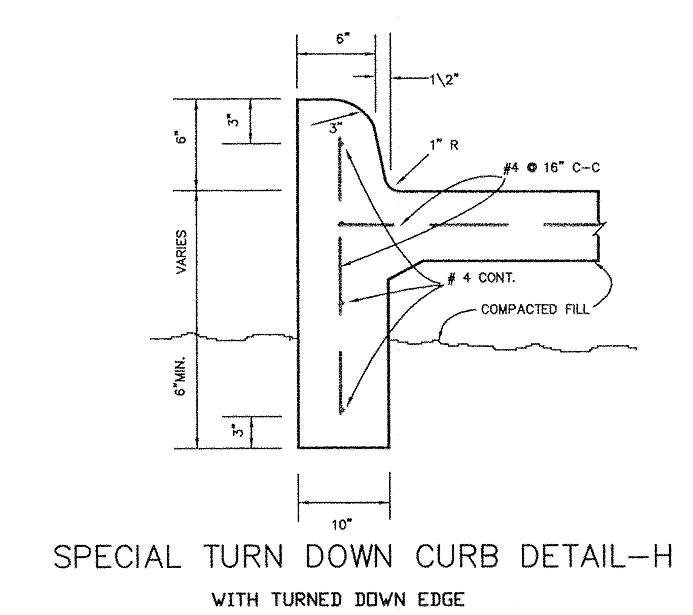

SPECIAL TURN DOWN CURB DETAIL-H
WITH TURNED DOWN EDGE

*RETAINING WALL DETAILS PROVIDED BY PSS PARTNERSHIP, INC.

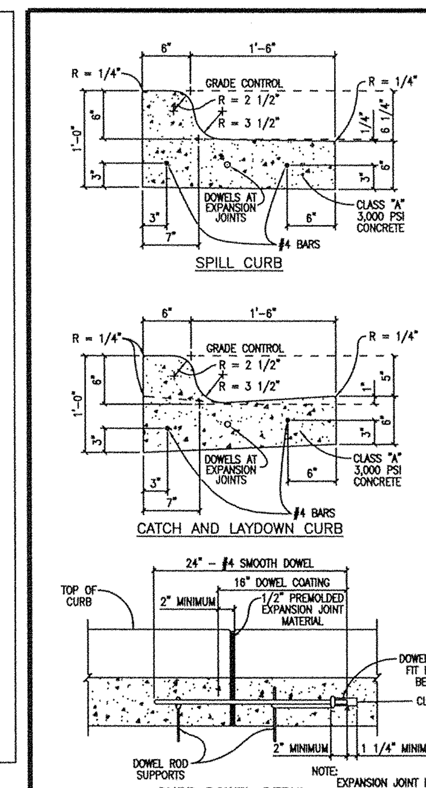

NOTES:
1. ALL WORK AND MATERIAL SHALL CONFORM TO ASTM A615, A615M, C309, AND D1752. BROOM FINISH EXPOSED SURFACE.
2. CONTRACTION JOINT SPACING 10' MAX.
3. EXPANSION JOINTS AS PER STD. ASTM D-1752.
4. 1/2" EXPANSION JOINT MATERIAL SHALL BE PROVIDED WHERE CURB IS ADJACENT TO SIDEWALK OR RIP-RAP.
5. TRANSITIONS BETWEEN CURBS OR DIFFERING CROSS SECTIONS SHALL OCCUR OVER A 20 FOOT LENGTH AS APPROVED BY THE ENGINEER OR THE CITY OF PFLUGERVILLE.
6. ALL CONCRETE SHALL BE CLASS A, 3000 PSI.
7. ALL SURFACES THAT ARE CHIPPED OR OTHERWISE DAMAGED DURING CONSTRUCTION SHALL BE REPAIRED.
8. ONE OF THE FOLLOWING SCHEMES OF REINFORCEMENT SHALL BE REQUIRED. THE MANNER OF PLACEMENT AND LOCATION SHALL BE TO THE SATISFACTION OF THE ENGINEER OR THE CITY OF PFLUGERVILLE.
A. CURB AND GUTTER (REINFORCED) SHALL HAVE LONGITUDINAL REINFORCING BARS AS FOLLOWS: TWO #4.
B. ALL TYPES OF CURB (REINFORCED) SHALL HAVE #4 BAR FOR LONGITUDINAL REINFORCEMENT.
9. REINFORCING BARS SHALL BE LAPPED A MINIMUM OF 15 INCH.

ISSUE DATE: FEBRUARY 2005 | REVISIONS | DATE | APPROVED | DRAWN | SCALE: N.T.S.
CITY OF PFLUGERVILLE
CURB AND GUTTER DETAILS
CONSTRUCTION STANDARDS AND DETAILS
DWG. #SD-06 | SD07.DWG

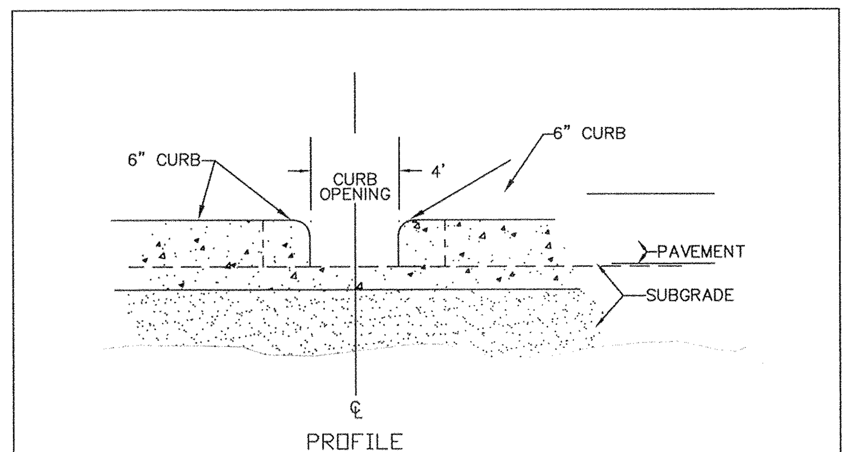

CURB CUT
N.T.S.

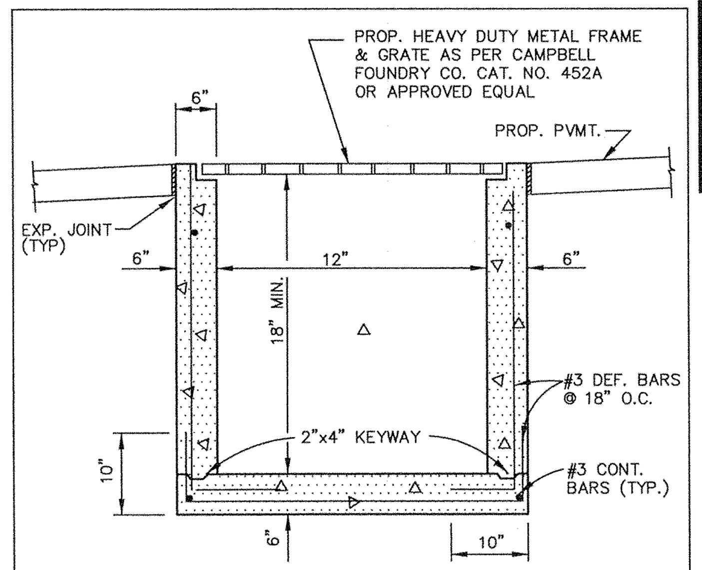

PROPOSED TRENCH DRAIN
N.T.S.

TEXAS ENGINEERING & MAPPING CO.
REGISTRATION # F-2906

STATE OF TEXAS
CARLOS J. BARILLAS
50474
REGISTERED PROFESSIONAL ENGINEER
9/19/12

C-8 NOTES & DETAILS

Scale: 1"=20' JOB NO: 356-123S

SEE SHT C-0 FOR TOPOGRAPHIC SURVEY
SEE SHT C-1 FOR GRADING & DRAINAGE
SEE SHT C-2 FOR STORM SEWER LAYOUT
SEE SHT C-3 FOR DRAINAGE AREA MAP
SEE SHT C-4 FOR SANITARY & WATER
SEE SHT C-5 FOR PAVEMENT LAYOUT
SEE SHT C-6 FOR SWPPP PLAN
SEE SHT C-7 FOR SWPPP NOTES & DETAILS
SEE SHT C-8 FOR NOTES & DETAILS
SEE SHT C-9 FOR NOTES & DETAILS
SEE SHT C-10 FOR LEFT TURN LANE
SEE SHT C-11 FOR TRAFFIC CONTROL PLAN

NewQuest PROPERTIES™
8807 W. SAM HOUSTON PARKWAY N., SUITE 200
HOUSTON, TEXAS 77040
P. 281.477.4300 F. 281.477.4399

STONE HILL TOWN CENTER
LOT 7 BLK 4
1616 TOWN CENTER
PFLUGERVILLE, TX
78660-7610
A DEVELOPMENT OF:
NEWQUEST PROPERTIES

ISSUE LOG

NO.	DESCRIPTION	DATE
	ISSUE FOR PERMIT	06/15/12
	ISSUED FOR CONSTRUCTION	09/19/12

O'BRIEN
5310 HARVEST HILL RD.
SUITE 136
DALLAS, TEXAS 75230
972 . 788 . 1010
www.obrienarch.com

T. E. A. M.
TEXAS ENGINEERING AND MAPPING
12810 CENTURY DRIVE
STAFFORD, TEXAS 77477
PHONE: (281) 491-2525 FAX: (281) 491-2535

DATE:	JOB:	SCALE:
05-25-12	12024	1"=20'

SHEET NO.

C-8

COPYRIGHT (c) 2012 OBRIEN THESE DRAWINGS, OR PARTS THEREOF, MAY NOT BE REPRODUCED IN ANY FORM, BY ANY METHOD, FOR ANY PURPOSE, WITHOUT PRIOR WRITTEN CONSENT FROM O'BRIEN

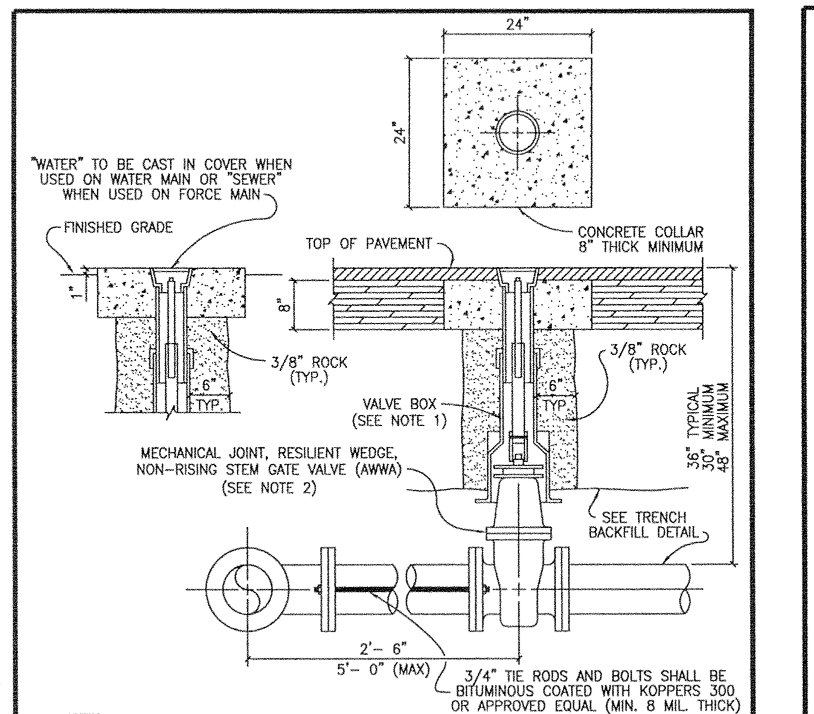

NOTES:

1. VALVE BOX SHALL BE 5 1/4" CAST IRON ADJUSTABLE HAVING AN ADJUSTABLE RANGE OF + OR – 6 INCHES FROM INSTALLED FINISH GRADE.
2. ACCEPTABLE GATE VALVES ARE:
   A. AMERICAN FLOW CONTROL – SERIES 2500
   B. MUELLER – 2360 SERIES
   C. CLOW

ISSUE DATE: FEBRUARY 2005 | REVISIONS | DATE | APPROVED | DRAWN | SCALE: N.T.S.
CITY OF PFLUGERVILLE — TYPICAL VALVE SETTING — CONSTRUCTION STANDARDS AND DETAILS — DWG. # W-07 — W07.DWG

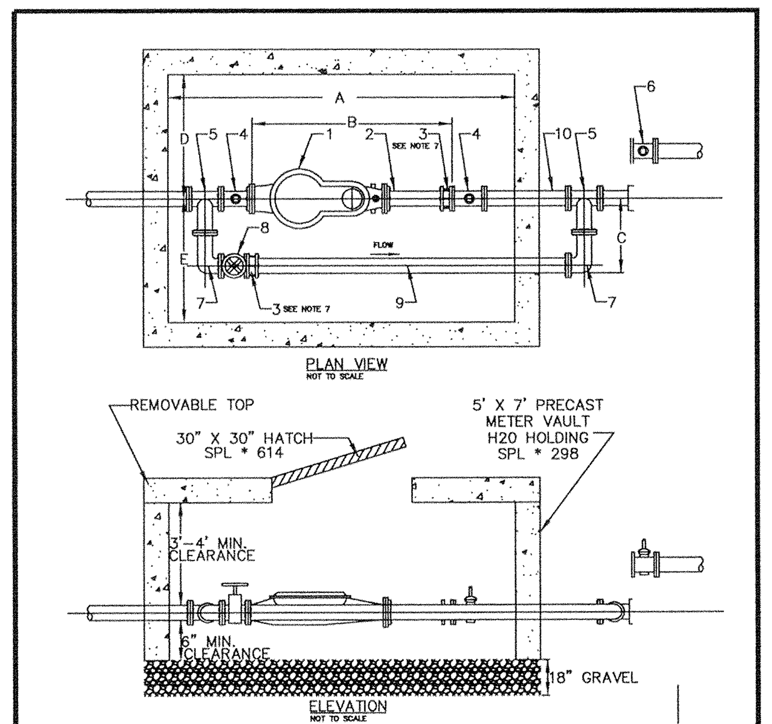

No.	DESCRIPTION	LENGTH
A	OVERALL LENGTH (INSIDE OF VAULT)	84"
B	METER + NIPPLE+ FCA	37 1/2"
C	CENTER OF MAINLINE TO OUTSIDE OF BYPASS	17 1/2"
D	CENTERLINE OF MAINLINE TO INSIDE OF VAULT	30"
E	CENTERLINE OF MAINLINE TO INSIDE OF VAULT	30"

ISSUE DATE: FEBRUARY 2005 | REVISIONS | DATE | APPROVED | DRAWN | SCALE: N.T.S.
CITY OF PFLUGERVILLE — METER VAULT — CONSTRUCTION STANDARDS AND DETAILS — DWG. #W-26 — W26.DWG

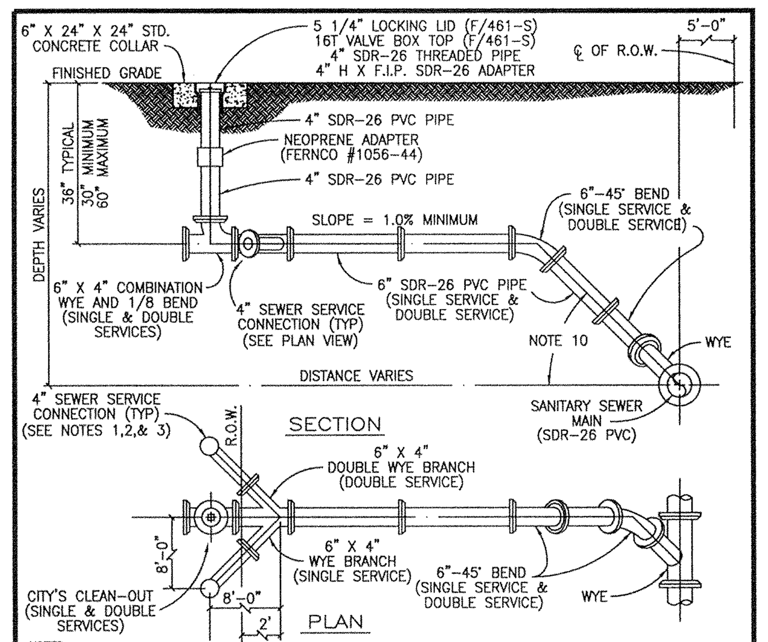

NOTES:

1. SERVICE CONNECTION RISERS SHALL TERMINATE 6' INSIDE THE PROPERTY LINE.
2. THE END OF EACH SERVICE CONNECTION RISER SHALL BE EXTENDED 12" ABOVE FINISH GRADE.
3. EACH SERVICE CONNECTION SHALL BE PLUGGED WATER-TIGHT WITH AN APPROVED CAP OR PLUG.
4. CUT OFF BELL END WHEN USING FERCO COUPLING FOR V.C.P. (FOR EXISTING SERVICES ONLY).
5. FOR P.V.C. INSTALLATIONS, CONNECT TO EXISTING "BELL END" AND CONNECT OPPSITE END WITH P.V.C. TO P.V.C. KNOCK ON SLEEVE.
6. SOLIDLY TAMP BACKFILL AT LEAST ONE FOOT (1'-0") ABOVE TOP OF PIPE. SERVICES UNDER PAVED AREAS SHALL BE BACKFILLED TO THE SAME SPECIFICATIONS AS SHOWN ON PAVEMENT REPLACEMENT DETAIL.
7. CONTRACTOR SHALL MARK ON A CLEAN SET OF PLANS THE FINAL STATIONING OR DISTANCE AND DIRECTION FROM MANHOLE TO EACH SERVICE LATERAL AND GIVE TO ENGINEER FOR RECORD DRAWING PURPOSES.
8. ANY DEVIATION FROM THESE METHODS MUST BE APPROVED BY THE CITY OF PFLUGERVILLE ENGINEERING DEPARTMENT.
9. SERVICE LINE MATERIAL SHALL BE P.V.C., SDR-26.
10. SEWER SERVICE SLOPE TO BE 45' OFF CENTERLINE OF MAIN.

ISSUE DATE: FEBRUARY 2005 | REVISIONS | DATE | APPROVED | DRAWN | SCALE: N.T.S.
CITY OF PFLUGERVILLE — SEWER SERVICE CONNECTIONS — CONSTRUCTION STANDARDS AND DETAILS — DWG. # WW-13 — WW13.DWG

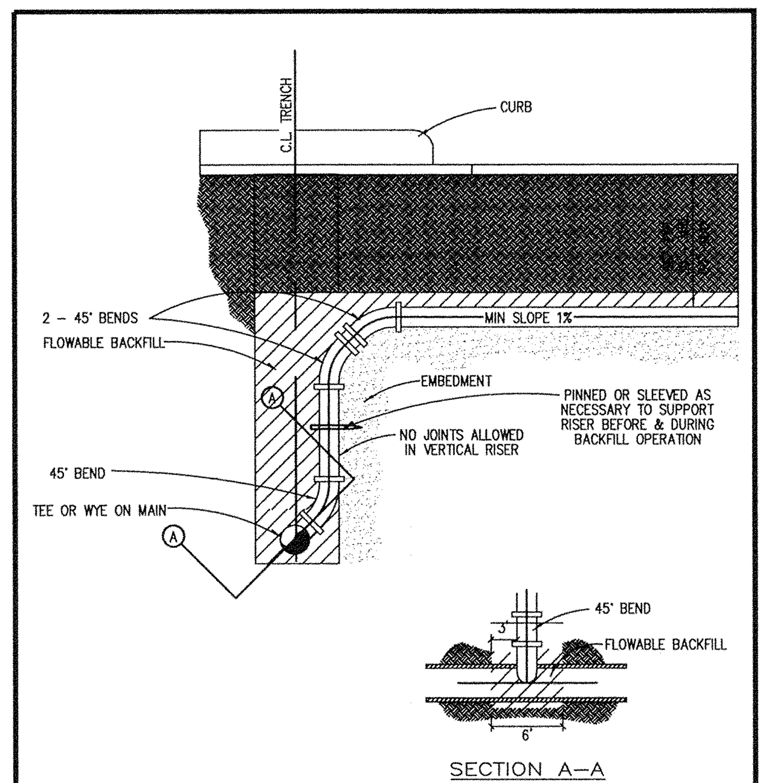

ISSUE DATE: FEBRUARY 2005 | REVISIONS | DATE | APPROVED | DRAWN | SCALE: N.T.S.
CITY OF PFLUGERVILLE — WASTEWATER DEEP SERVICE CONNECTION DETAIL — IF REQUIRED — CONSTRUCTION STANDARDS AND DETAILS — DWG. # WW-19 — WW19.DWG

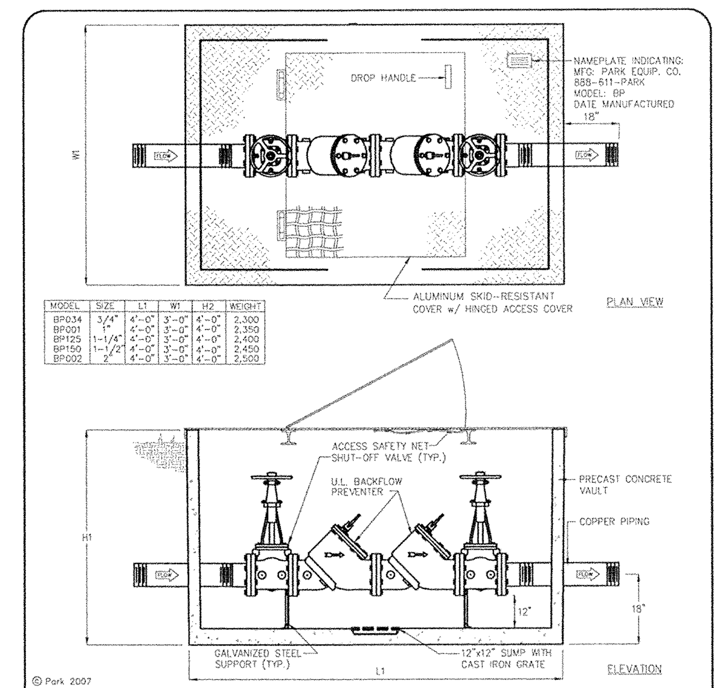

MODEL	SIZE	L1	W1	H2	WEIGHT
BP034	3/4"	4'-0"	3'-0"	4'-0"	2,300
BP001	1"	4'-0"	3'-0"	4'-0"	2,350
BP125	1-1/4"	4'-0"	3'-0"	4'-0"	2,400
BP150	1-1/2"	4'-0"	3'-0"	4'-0"	2,450
BP002	2"	4'-0"	3'-0"	4'-0"	2,500

Specifications

CONCRETE : Class 1 concrete with design strength of 4500 PSI at 28 days. Unit is of monolithic construction at floor and first stage of wall with sectional riser to required depth.

REINFORCEMENT: Grade 60 reinforced. Steel rebar conforming to ASTM A615 on required centers or equal.

STEEL COVER: 1/4" skid-resistant floor plate welded to 3" angle frame with (2) 3"x2-3/8" I-beam supports.

Engineering Data

The backflow assembly shall be factory assembled in vault & hydrostatically tested prior to delivery. Field excavation & preparation shall be complete prior to delivery. Pipe, valves and fittings of the assembly shall be approved by one or more of the following associations:

PROJECT : | CUSTOMER : | ARCHITECT : | ENGINEER : | ORDER # : | DATE :

PARK ENVIRONMENTAL EQUIPMENT — 888–611–PARK — www.park-USA.com — "Expect the Best"

3/4" THRU 2" DOUBLE CHECK BACKFLOW PREVENTER ASSEMBLY

SCALE NONE | DATE 1/07 | DWG. NO. BP34–2 | REV. B

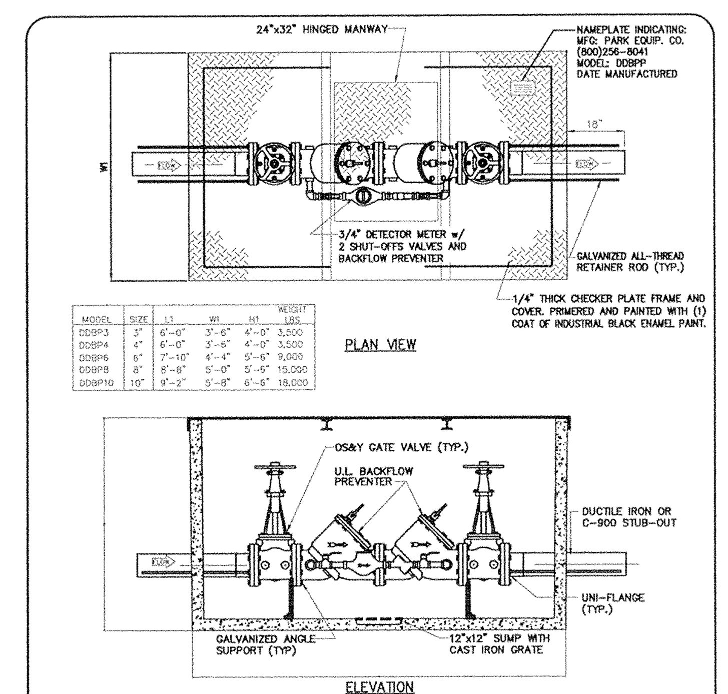

MODEL	SIZE	L1	W1	H1	WEIGHT LBS
DDBP3	3"	6'-0"	3'-6"	4'-0"	3,500
DDBP4	4"	6'-0"	3'-6"	4'-0"	3,500
DDBP6	6"	7'-10"	4'-4"	5'-6"	9,000
DDBP8	8"	8'-8"	5'-0"	5'-6"	15,000
DDBP10	10"	9'-2"	5'-8"	6'-6"	18,000

Specifications

CONCRETE : Class 1 concrete with design strength of 4500 PSI at 28 days. Unit is of monolithic construction at floor and first stage of wall with sectional riser to required depth.

REINFORCEMENT: Grade 60 reinforced. Steel rebar conforming to ASTM A615 on required centers or equal.

STEEL COVER: 1/4" steel skid-resistant floor plate welded to 3" angle frame with (2) 3"x2-3/8" I beam supports (300 PSF).

Engineering Data

Field excavation and preparation shall be completed prior to delivery of assembly. Use dimensional data as shown. Pipe, valves and fittings of the assembly are approved by one or more of the following associations:

PARK EQUIPMENT COMPANY — TEL (713) 937-7602 FAX (713) 937-4254 WATS (800) 256-8041 — "Expect the Best"

3" THRU 10" DOUBLE DETECTOR BACKFLOW PREVENTER ASSEMBLY FOR FIRE SERVICE

NONE | 5/96 | DDBP–1 | A

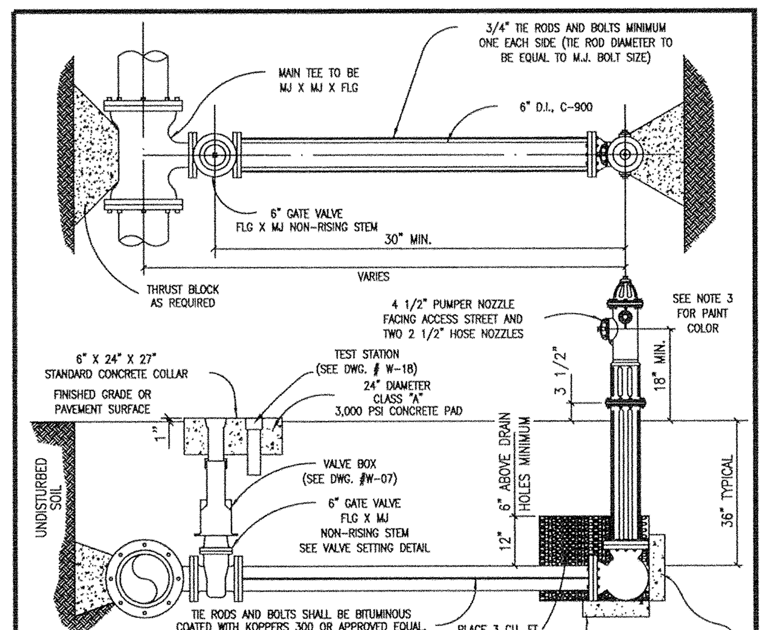

NOTES:

1. FIRE HYDRANT SHALL BE INSTALLED ON SAME SIDE OF ROAD AS WATER MAIN.
2. FIRE HYDRANT SHALL BE INSTALLED PLUMB AND TRUE.
3. ALL FIRE HYDRANT EXTERIORS SHALL BE FACTORY PRIMED AND PAINTED RED USING A HIGH GRADE ENAMEL.
4. HEEL AND THRUST BLOCKS TO REST IN UNDISTURBED SOIL.
5. THE ONLY FIRE HYDRANTS ACCEPTABLE ARE:
   MUELLER (AWWA APPROVED)
6. DOUBLE BLUE REFLECTOR "HYE-LITES" BRAND, MANUFACTURED BY PAVEMENT MARKERS INC. TO BE INSTALLED AT CENTERLINE OF STREET PERPENDICULAR TO HYDRANT.
7. ALL METALLIC PIPES AND FITTINGS SHALL BE WRAPPED WITH 8 MIL. POLYETHELENE FILM.

ISSUE DATE: FEBRUARY 2005 | REVISIONS | DATE | APPROVED | DRAWN | SCALE: N.T.S.
CITY OF PFLUGERVILLE — TYP. FIRE HYDRANT INSTALLATION — CONSTRUCTION STANDARDS AND DETAILS — DWG. # W-10 — W10.DWG

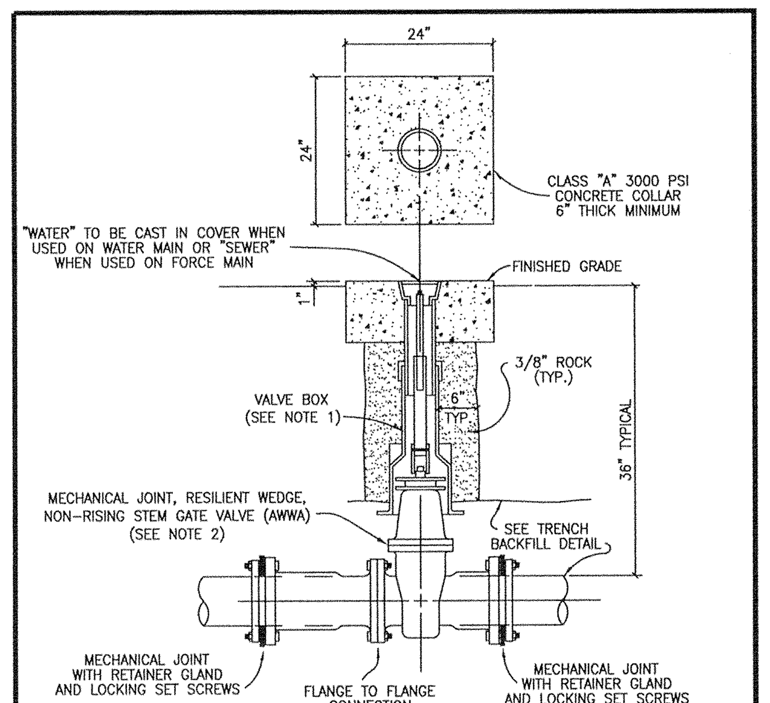

NOTES:

1. SEE VALVE SETTING DETAIL, DWG. #W–07.
2. ACCEPTABLE GATE VALVES ARE:
   A. MUELLER – 2360 SERIES
   B. CLOW

ISSUE DATE: FEBRUARY 2005 | REVISIONS | DATE | APPROVED | DRAWN | SCALE: N.T.S.
CITY OF PFLUGERVILLE — INLINE VALVE INSTALLATION — CONSTRUCTION STANDARDS AND DETAILS — DWG. # W-21 — W21.DWG

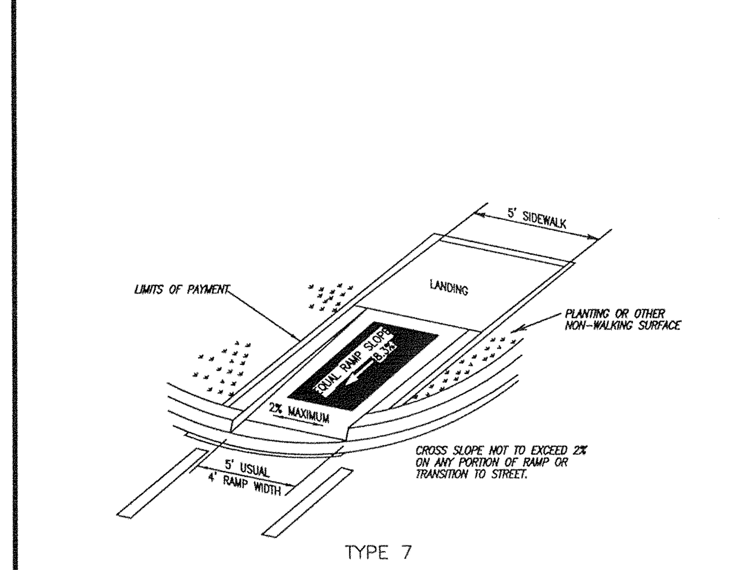

DIRECTIONAL RAMP WITHIN RADIUS

ISSUE DATE: FEBRUARY 2005 | REVISIONS | DATE | APPROVED | DRAWN | SCALE: N.T.S.
CITY OF PFLUGERVILLE — SIDEWALK RAMP DETAIL TYPE 7 — CONSTRUCTION STANDARDS AND DETAILS — DWG. #SD-33-A — SD33-A.DWG

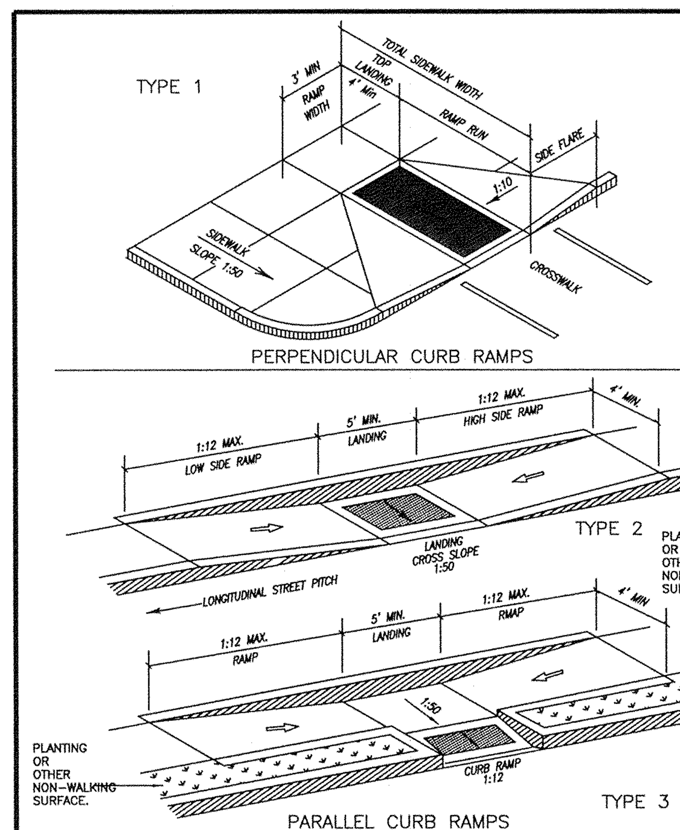

ISSUE DATE: FEBRUARY 2005 | REVISIONS | DATE | APPROVED | DRAWN | SCALE: N.T.S.
CITY OF PFLUGERVILLE — SIDEWALK RAMP DETAILS TYPE 1–3 — CONSTRUCTION STANDARDS AND DETAILS — DWG. #SD-31 — SD31.DWG

NOTES:

1. COMMERCIAL SIDEWALK WIDTHS – 6'
   RESIDENTIAL SIDEWALK WIDTHS – 4'
2. ALL SLOPES ARE MAXIMUM ALLOWABLE. FLATTER SLOPES THAT WILL STILL DRAIN PROPERLY ARE ENCOURAGED.
3. ALL CONCRETE SURFACES SHALL RECEIVE A LIGHT BROOM FINISH UNLESS NOTED OTHERWISE IN THE PLANS.
4. FOR PURPOSES OF WARNING, THE CURB RAMPS SHALL HAVE A LIGHT REFLECTIVE VALUE AND TEXTURE THAT SIGNIFICANTLY CONTRASTS WITH THAT OF ADJOINING PEDESTRIAN ROUTES.
5. TEXTURES MAY CONSIST OF PAVERS WITH TRUNCATED DOMED SURFACES OR GROOVES. TEXTURES ARE REQUIRED TO BE DETECTABLE UNDERFOOT. SURFACES THAT WOULD ALLOW WATER TO ACCUMULATE ARE PROHIBITED.
6. COLOR CONTRAST, FOR EXAMPLE, CAN BE ACCOMPLISHED WITH COLORED CONCRETE PAVERS THAT HAVE TRUNCATED DOMES OR BY COLORED STAINED CONCRETE WITH GROOVES, EITHER OF WHICH WOULD PROVIDE A CONTRAST WITH TYPICALLY LIGHT COLORED CONCRETE.
7. ADDITIONAL INFORMATION ON CURB RAMP LOCATION, DESIGN, VISIBILITY AND TEXTURE MAY BE FOUND IN THE CURRENT EDITION OF THE TEXAS ACCESSIBILITY STANDARDS (TAS) PREPARED AND ADMINISTERED BY THE TEXAS DEPARTMENT OF LICENSING AND REGULATION (TDLR).
8. RAISED MEDIANS SEPARATE OPPOSING DIRECTIONS OF TRAFFIC AND PROVIDE A REFUGE AREA FOR PEDESTRIANS IF THEY ARE UNABLE TO CROSS THE ENTIRE ROADWAY IN THE ALLOTTED SIGNAL PHASE. TO SERVE AS A REFUGE AREA, THE MEDIAN SHOULD BE A MINIMUM OF 4 FEET WIDE. MEDIANS SHOULD BE DESIGNED TO PROVIDE ACCESSIBLE PASSAGE OVER OR THROUGH THEM.
9. ALL SIDEWALK PLANS AND DETAILS SHALL BE SUBMITTED TO AND APPROVED BY THE TEXAS DEPARTMENT OF LICENSING AND REGULATION (TDLR).
10. ANY PART OF THE ACCESSIBLE ROUTE WITH A SLOPE GRATER THAN 1:20 (5%) SHALL BE CONSIDERED A RAMP. IF A RAMP HAS A RISE GREATER THAN 6 INCHES OR A HORIZONTAL PROJECTION GREATER THAN 72 INCHES, THEN IT SHALL HAVE HANDRAILS ON BOTH SIDES. THE ONLY EXCEPTION IS AT CURB RAMPS. HANDRAILS ARE NOT REQUIRED ON CURB RAMPS. CURB RAMPS SHALL BE PROVIDED WHEREVER AN ACCESSIBLE ROUTE CROSSES (PENETRATES) A CURB. CURB RAMPS ARE GENERALLY INTERPRETED AS ONLY THE PORTION TYING DIRECTLY INTO THE ROADWAY.
11. TRAFFIC SIGNAL OR ILLUMINATION POLES, GROUND BOXES, CONTROLLER BOXES, SIGNS, DRAINAGE FACILITIES AND OTHER ITEMS SHALL BE PLACED SO NOT TO OBSTRUCT THE ACCESSIBLE ROUTE.
12. ALL SIDEWALKS WILL BE DOWELED INTO EXISTING SIDEWALKS, DRIVEWALKS, DRIVEWAYS, INLET BOXES, RETAINING WALLS, ETC.

ISSUE DATE: FEBRUARY 2005 | REVISIONS | DATE | APPROVED | DRAWN | SCALE: N.T.S.
CITY OF PFLUGERVILLE — PEDISTRIAN RAMPS GENERAL NOTES — CONSTRUCTION STANDARDS AND DETAILS — DWG. #SD-28 — SD28.DWG

NOTE:
TOP 3' OF DRAINAGE GRAVEL TO BE INSPECTED YEARLY & CLEANED AS REQUIRED.

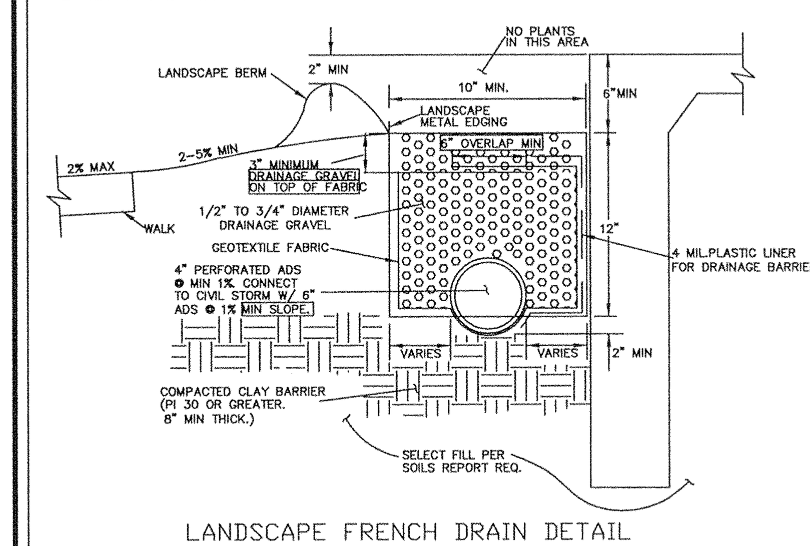

LANDSCAPE FRENCH DRAIN DETAIL

N.T.S.

IF REQUIRED

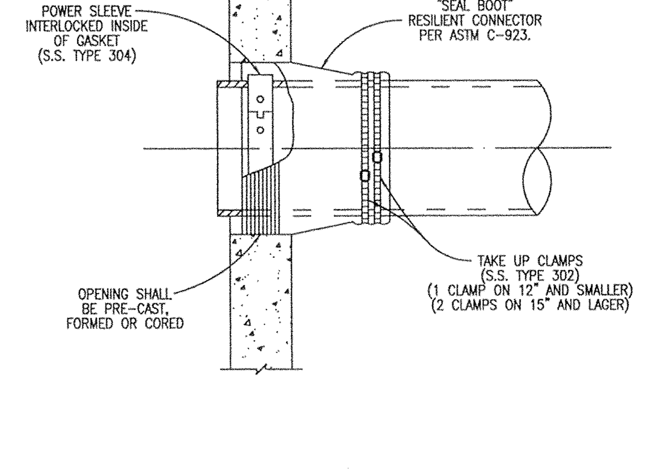

ISSUE DATE: FEBRUARY 2005 | REVISIONS | DATE | APPROVED | DRAWN | SCALE: N.T.S.
CITY OF PFLUGERVILLE — FLEXIBLE "SEAL BOOT" CONNECTOR — CONSTRUCTION STANDARDS AND DETAILS — DWG. # WW-10 — WW10.DWG

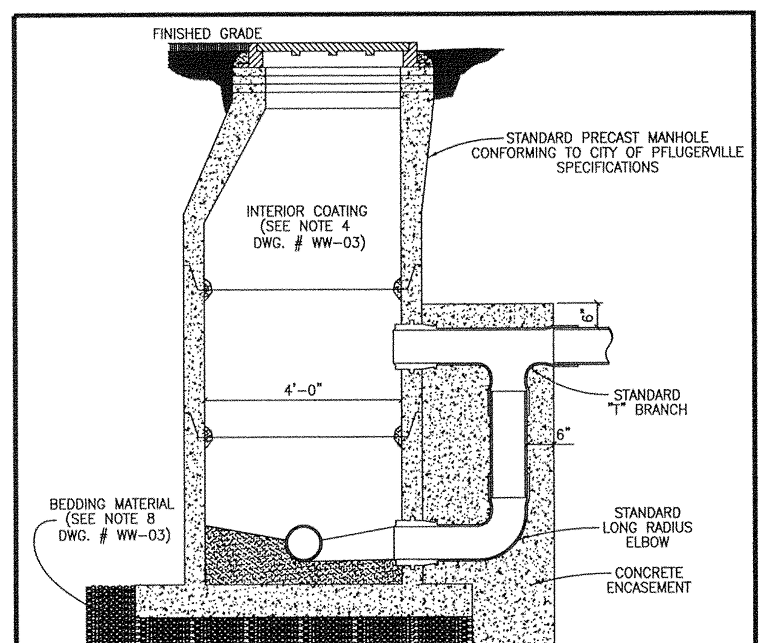

NOTES:

1. CONCRETE ENCASEMENT FOR DROP CONNECTION TO BE POURED INTEGRALLY WITH BOTH MANHOLE SLAB AND WALL.
2. DROP CONNECTIONS SHALL BE REQUIRED WHENEVER AN INFLUENT SEWER IS LOCATED THIRTY INCHES (30") OR MORE ABOVE THE MAIN INVERT CHANNEL.
3. A FLOW CHANNEL SHALL BE CONSTRUCTED INSIDE MANHOLE TO DIRECT INFLUENT INTO FLOW STREAM.
4. WHEN P.V.C. IS USED IN SANITARY SEWER LINES, SOLVENT TYPE JOINT P.V.C. FITTINGS MAY BE UTILIZED IN THE DROP ASSEMBLY ONLY.
5. MINIMUM PIPE SIZE FOR DROP IS EIGHT INCHES (8").
6. SEE STANDARD MANHOLE DETAIL (DWG. # WW-03) FOR ADDITIONAL REQUIREMENTS.

ISSUE DATE: FEBRUARY 2005 | REVISIONS | DATE | APPROVED | DRAWN | SCALE: N.T.S.
CITY OF PFLUGERVILLE — DROP CONNECTION–PRECAST MANHOLE TYPE "A" — CONSTRUCTION STANDARDS AND DETAILS — DWG. # WW-04 — WW04.DWG

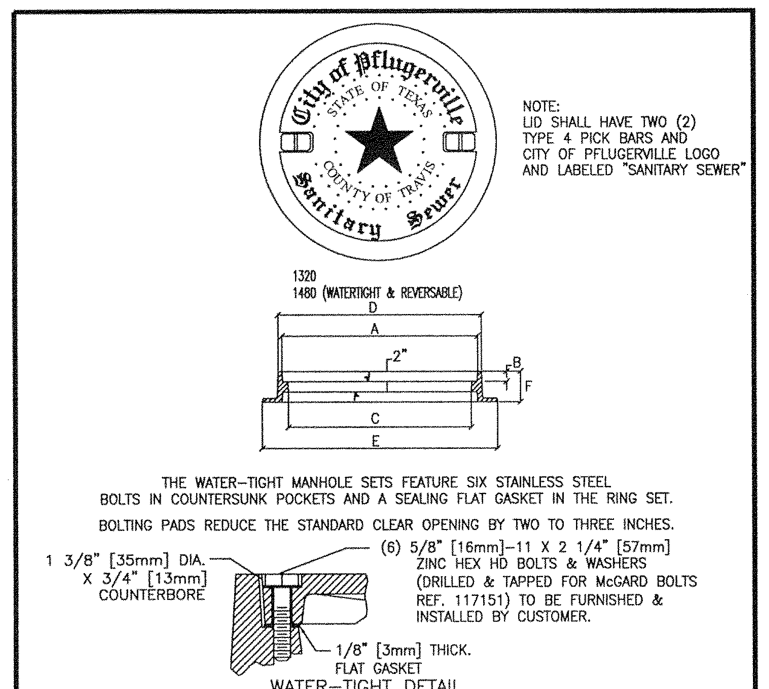

NOTE:
LID SHALL HAVE TWO (2) TYPE 4 PICK BARS AND CITY OF PFLUGERVILLE LOGO AND LABELED "SANITARY SEWER"

THE WATER–TIGHT MANHOLE SETS FEATURE SIX STAINLESS STEEL BOLTS IN COUNTERSUNK POCKETS AND A SEALING FLAT GASKET IN THE RING SET.

BOLTING PADS REDUCE THE STANDARD CLEAR OPENING BY TWO TO THREE INCHES.

	DIMENSIONS						TOTAL
	A	B	C	D	E	F	WEIGHT
1320	32	1 1/2	30	34 7/16	46	6 1/2	505 LBS
1480	32	1 1/2	30	32 1/4	38	4	350 LBS

ISSUE DATE: FEBRUARY 2005 | REVISIONS | DATE | APPROVED | DRAWN | SCALE: N.T.S.
CITY OF PFLUGERVILLE — STANDARD WASTEWATER MANHOLE SET — CONSTRUCTION STANDARDS AND DETAILS — DWG. # WW-07 — WW07.DWG

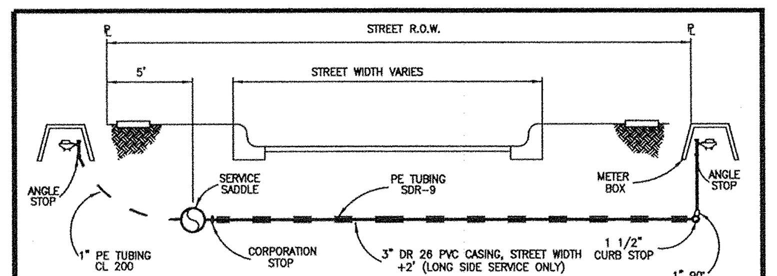

SHORT SIDE SERVICE
1" DOUBLE STRAP SERVICE SADDLE SMITH BLAIR ALL BRONZE, NPT
1" CORPORATION STOP, MUELLER NPT
1" POLYETHYLENE TUBING, CL. 200
1"X3/4" ANGLE STOP VALVE 1 LOCK WING TYPE 1
METER BOX. SET IN SAND; WALL NOTCHED, OPPOSITE ANGLE STOP & SELF-LOCKING CAST IRON LID.

LONG SIDE SERVICE
1 1/2" SADDLE, TWO STRAP SMITH BLAIR, BRONZE
1 1/2" CORPORATION STOP OR BALL VALVE
1 1/2 CL.200 POLYETHYLENE TUBING
U-BRANCH 1"X 1/2" CENTER
3", SDR-26, PVC CASING (LONG SIDE SERVICE ONLY)
1" ANGLE STOP, 2-REQUIRED
1 1/2" CURB STOP
1 1/2"X1" REDUCER
1 1/2"X1" BRASS BUSHING
1" BRASS 1/4 BEND
LARGE, ROUND TWO-WAY METER BOX.

NOTES:

1. SUCCESSIVE TAPS INTO THE WATER MAIN SHALL BE SPACED A MINIMUM OF 18" OFFSET AND AT THE CENTERLINE AS SHOWN ON DETAIL "A".
2. METER BOXES SHALL BE SET TO CONFORM TO FINISHED GRADE.
3. AUTHORIZED SERVICE LINE MATERIAL:
   A. POLYETHYLENE TUBING SHALL BE SDR–9. (MAX. DIA. 1") CLASS 200
   B. SCHEDULE 80, P.V.C. (DIA. LARGER THAN 1") CLASS 200
4. ROTATE THE CORPORATION STOP SO THAT THE OPERATING NUT IS ACTUATED FROM THE VERTICAL POSITION RATHER THAN THE HORIZONTAL. SEE STD. RISER FOR CORP. STOP DETAIL, (DWG # W08).
5. SERVICE LINES SHALL BE CONTINUOUS FROM CORPORATION STOP TO CORPORATION STOP WITH NO FITTINGS IN BETWEEN.
6. SERVICE CASING SHALL NOT BE INSTALLED BY WATER JETTING UNDER ROADWAY.
7. CASING REQUIRED FOR ALL PAVEMENT CROSSINGS. 3" SDR–26 REQUIRED FOR OPEN–CUT. GALVANIZED CASING PIPE REQUIRED FOR JACK AND BORE. LIMITS OF CASING SHOULD EXTEND TWO FEET BEYOND THE BACK–OF–CURB.
8. THERE SHALL BE A 6" ENVELOPE OF 3/8" ROCK AROUND ALL SERVICE PIPE.
9. ANY VARIATIONS ON FITTINGS MUST BE APPROVED BY THE CITY ENGINEER.
10. METER BOX COVER TO BE CAPABLE OF HOUSING IRON AUTOMATIC METER READING DEVICE. USE ARMOCAST PRODUCTS CO. – PART NO. A6001922–IT OR APPROVED EQUAL.
11. ALL SERVICE LINES SHALL BE PLACED 90' PERPENDICULAR TO THE ROADWAY.

ISSUE DATE: FEBRUARY 2005 | REVISIONS | DATE | APPROVED | DRAWN | SCALE: N.T.S.
CITY OF PFLUGERVILLE — TYP. WATER SERVICE – ELEVATION — CONSTRUCTION STANDARDS AND DETAILS — DWG. # W-03 — W03.DWG

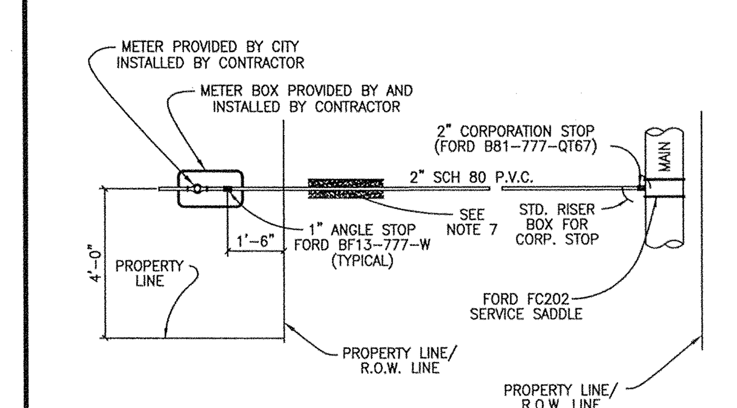

NOTES:

1. AUTHORIZED SERVICE LINE MATERIAL:
   A. POLYETHYLENE TUBING SDR 9. (MAX. DIA. 1") CLASS 200
   B. SCHEDULE 80, P.V.C. (DIA. LARGER THAN 1") CLASS 200
2. ANGLE STOP SHALL BE 1" MINIMUM.
3. 1" ANGLE STOPS WITH 3/4" VALVES SHALL NOT BE PERMITTED.
4. MULTIPLE SERVICE/METER INSTALLATIONS OF MORE THAN 4 METERS PER SERVICE AND SERVICE LINES LARGER THAN 2" IN DIAMETER SHALL BE HANDLED ON AN INDIVIDUAL BASIS.
5. ANGLE STOPS 1 1/2" AND 2" IN SIZE SHALL BE PROVIDED WITH BOTH A LOCKING CAP AND METER FLANGE.
6. ANGLE STOPS SHALL BE INSTALLED 8" BELOW FINISHED GRADE AND MARKED WITH A 2" X 2" X 48" TREATED WOOD STAKE, PAINTED BLUE.
7. THERE SHALL BE A 6" ENVELOPE OF 3/8" ROCK AROUND ALL SERVICE PIPE.
8. CASING REQUIREMENTS FOR SERVICE LINES CROSSING ROADWAYS SEE DETAIL W–03 NOTE #7.
9. ANY VARIATIONS ON FITTINGS MUST BE APPROVED BY THE CITY ENGINEER.
10. ALL SERVICE LINES SHALL BE PLACED 90' PERPENDICULAR TO THE ROADWAY.

ISSUE DATE: FEBRUARY 2005 | REVISIONS | DATE | APPROVED | DRAWN | SCALE: N.T.S.
CITY OF PFLUGERVILLE — SINGLE WATER SERVICE – PLAN — CONSTRUCTION STANDARDS AND DETAILS — DWG. # W-04 — W04.DWG

TEXAS ENGINEERING & MAPPING CO.
REGISTRATION # F–2906

STATE OF TEXAS — CARLOS J. BARILLAS — 50474 — REGISTERED PROFESSIONAL ENGINEER — 9/19/12

C-9 NOTES & DETAILS

Scale: 1"=20' — JOB NO: 356–123S

SEE SHT C–0 FOR TOPOGRAPHIC SURVEY
SEE SHT C–1 FOR GRADING & DRAINAGE
SEE SHT C–2 FOR STORM SEWER LAYOUT
SEE SHT C–3 FOR DRAINAGE AREA MAP
SEE SHT C–4 FOR SANITARY & WATER
SEE SHT C–5 FOR PAVEMENT LAYOUT
SEE SHT C–6 FOR SWPPP PLAN
SEE SHT C–7 FOR SWPPP NOTES & DETAILS
SEE SHT C–8 FOR NOTES & DETAILS
SEE SHT C–9 FOR NOTES & DETAILS
SEE SHT C–9 FOR LEFT TURN LANE
SEE SHT C–11 FOR TRAFFIC CONTROL PLAN

NewQuest PROPERTIES™
8807 W. SAM HOUSTON PARKWAY N., SUITE 200
HOUSTON, TEXAS 77040
P. 281.477.4300 F. 281.477.4399

STONE HILL TOWN CENTER

LOT 7 BLK 4

1616 TOWN CENTER
PFLUGERVILLE, TX
78660-7610

A DEVELOPMENT OF:
NEWQUEST PROPERTIES

ISSUE LOG

NO.	DESCRIPTION	DATE
	ISSUE FOR PERMIT	06/15/12
	ISSUED FOR CONSTRUCTION	09/19/12

O'BRIEN
5310 HARVEST HILL RD.
SUITE 136
DALLAS, TEXAS 75230
972 . 788 . 1010
www.obrienarch.com

T.E.A.M.
TEXAS ENGINEERING AND MAPPING
12810 CENTURY DRIVE
STAFFORD, TEXAS 77477
PHONE: (281) 491-2525 FAX: (281) 491-2535

DATE:	JOB:	SCALE:
05-25-12	12024	1"=20'

SHEET NO.

C-9

COPYRIGHT © 2012 OBRIEN THESE DRAWINGS, OR PARTS THEREOF, MAY NOT BE REPRODUCED IN ANY FORM, BY ANY METHOD, FOR ANY PURPOSE, WITHOUT PRIOR WRITTEN CONSENT FROM O'BRIEN

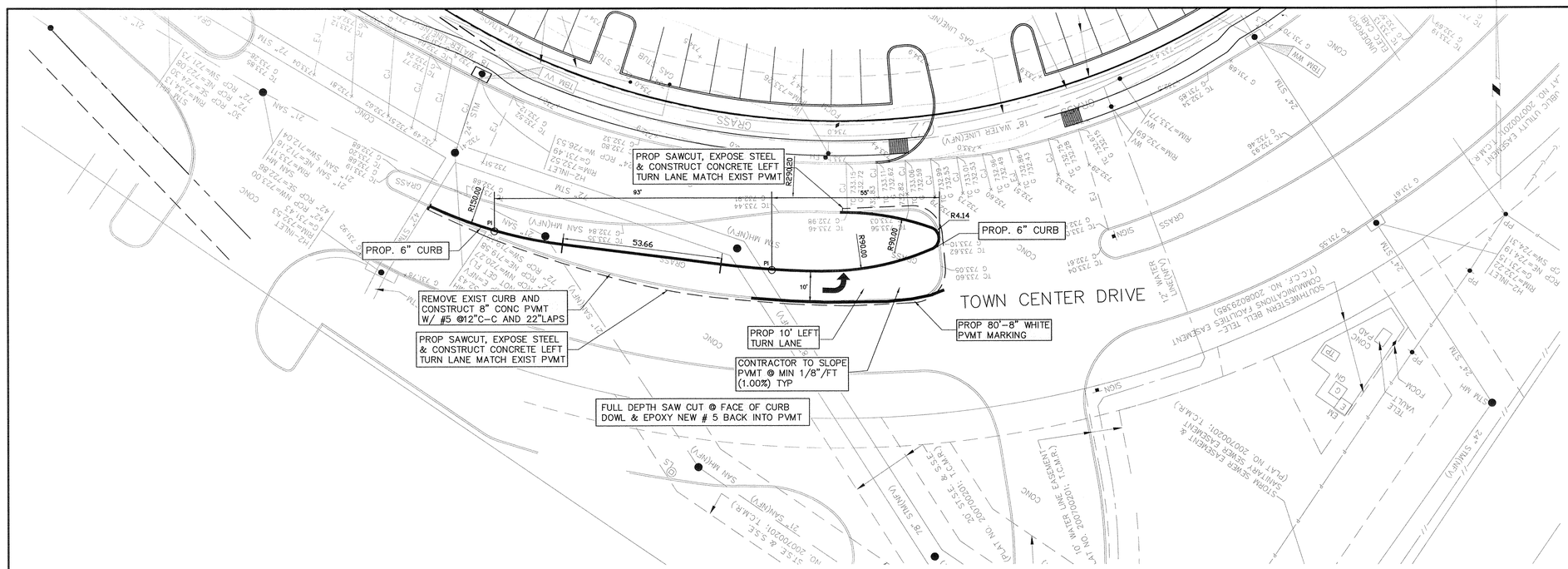

GRAPHIC SCALE

20 0 10 20 40 80

(IN FEET)
1 inch = 20 ft.

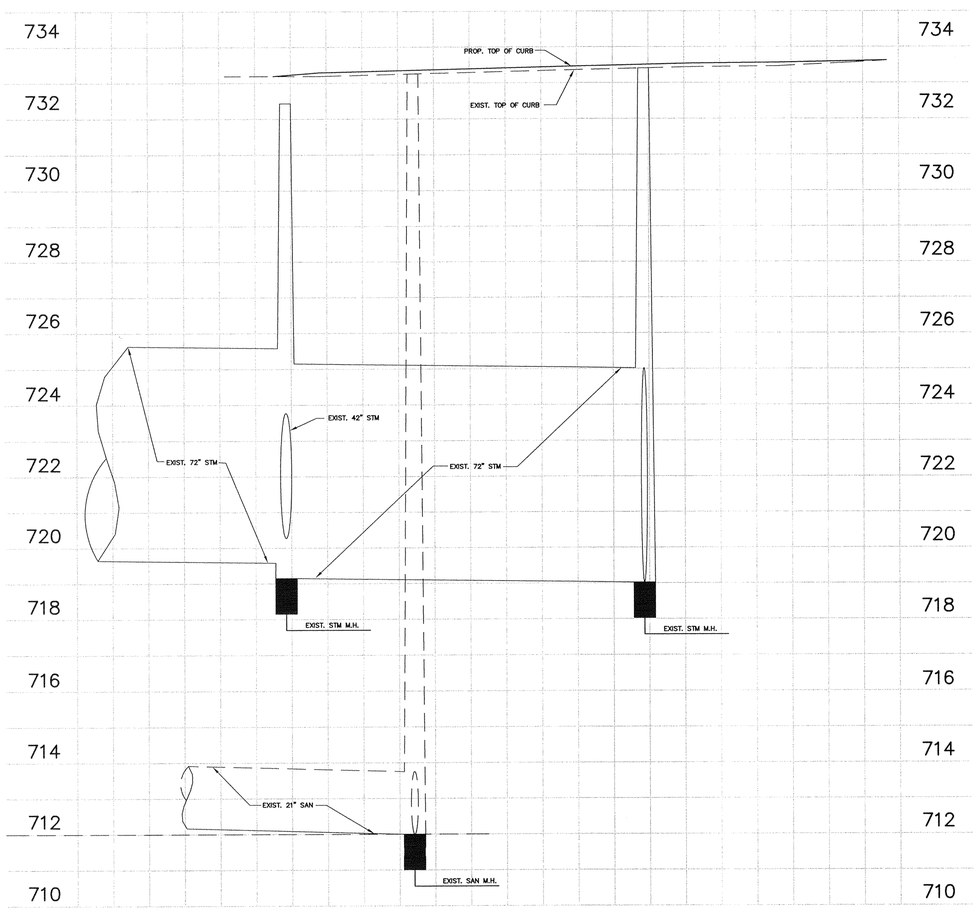

THE RELOCATION OF EXISTING TREES, LANDSCAPING, SPRINKLER SYSTEMS, WATER METERS, FIRE HYDRANTS, MANHOLES, AND PIPELINES (IF APPLICABLE) REINSTALLED AS RECOMMENDED BY THE CITY OF PFLUGERVILLE.

EXISTING REINFORCED CONCRETE PAVEMENT IS TO BE MACHINE SAW-CUT 1-1/2 INCHES DEEP TO EXPOSE A MINIMUM OF TWENTY-FOUR (24) INCHES OF REINFORCING BARS AND PLACE NEW REINFORCING (1/2 INCH DIAMETER DEFORMED BARS) TWENTY-FOUR (24) INCHES CENTER TO CENTER BOTH WAYS AND TIE NEW REINFORCING BARS TEN (10) INCH LAPS TO EXISTING REINFORCING BARS.

REINFORCING CONCRETE PAVEMENT IS TO BE A MINIMUM EIGHT (8) INCHES WITH A MINIMUM OF 5.0 SACK CEMENT PER CUBIC YARD, [3,500 PSI IN TWENTY-EIGHT (28) DAYS]. NOTE: DEPTH OF CONCRETE TO MEET CURRENT REQUIREMENTS OF DEPTH OF EXISTING PAVEMENT WHENEVER IT IS GREATER.

SUBGRADE SHALL BE SIX (6) INCHES LIME STABILIZATION AND COMPACTED TO NINETY-FIVE (95) PERCENT STANDARD PROCTOR DENSITY (+/-) TWO-(2) PERCENT MOISTURE.

SLOPE ON PROPOSED CONCRETE LEFT TURN SLOTS IS TO BE AN MINIMUM OF 1/8 INCH PER FOOT WITH CROWN AT CENTER OF ESPLANADE.

GUIDELINES SET FOR IN THE "MANUAL ON UNIFORM TRAFFIC CONTROL DEVICES" SHALL BE OBSERVED.

CONTRACTOR TO FIELD VERIFY ALL EXISTING UTITILIES BEFORE COMMENCING ANY CONSTRUCTION. CONTRACTOR TO VERIFY THAT NO (GAS, ELECTRICAL, SPRINKLER SYSTEM AND CABLE/TELEPHONE LINES. ETC) CONFLICT WITH ANY CONSTRUCTION

ALL TRAFFIC MARKINGS SHALL BE PER THE CITY OF PFLUGERVILLE REQ.

TEXAS ENGINEERING & MAPPING CO.
REGISTRATION # F-2906

STATE OF TEXAS
CARLOS J. BARILLAS
50474
REGISTERED PROFESSIONAL ENGINEER

9/18/12

C-10 LEFT TURN LANE

Scale: 1"=20' HORZ, 1"=2' VERT JOB NO: 356-123S

SEE SHT C-0 FOR TOPOGRAPHIC SURVEY
SEE SHT C-1 FOR GRADING & DRAINAGE
SEE SHT C-2 FOR STORM SEWER LAYOUT
SEE SHT C-3 FOR DRAINAGE AREA MAP
SEE SHT C-4 FOR SANITARY & WATER
SEE SHT C-5 FOR PAVEMENT LAYOUT
SEE SHT C-6 FOR SWPPP PLAN
SEE SHT C-7 FOR SWPPP NOTES & DETAILS
SEE SHT C-8 FOR NOTES & DETAILS
SEE SHT C-9 FOR NOTES & DETAILS
SEE SHT C-10 FOR LEFT TURN LANE
SEE SHT C-11 FOR TRAFFIC CONTROL PLAN

NewQuest PROPERTIES
8807 W. SAM HOUSTON PARKWAY N., SUITE 200
HOUSTON, TEXAS 77040
P. 281.477.4300 F. 281.477.4399

STONE HILL TOWN CENTER

LOT 7 BLK 4

1616 TOWN CENTER
PFLUGERVILLE, TX
78660-7610

A DEVELOPMENT OF:
NEWQUEST PROPERTIES

ISSUE LOG

NO.	DESCRIPTION	DATE
	ISSUE FOR PERMIT	06/15/12
	ISSUED FOR CONSTRUCTION	09/19/12

TEXAS ENGINEERING AND MAPPING
12810 CENTURY DRIVE
STAFFORD, TEXAS 77477
PHONE: (281) 491-2525 FAX: (281) 491-2535

DATE:	JOB:	SCALE:
05-25-12	12024	1"=20'

SHEET NO.

C-10

COPYRIGHT © 2012 OBRIEN THESE DRAWINGS, OR PARTS THEREOF, MAY NOT BE REPRODUCED IN ANY FORM, BY ANY METHOD, FOR ANY PURPOSE, WITHOUT PRIOR WRITTEN CONSENT FROM OBRIEN

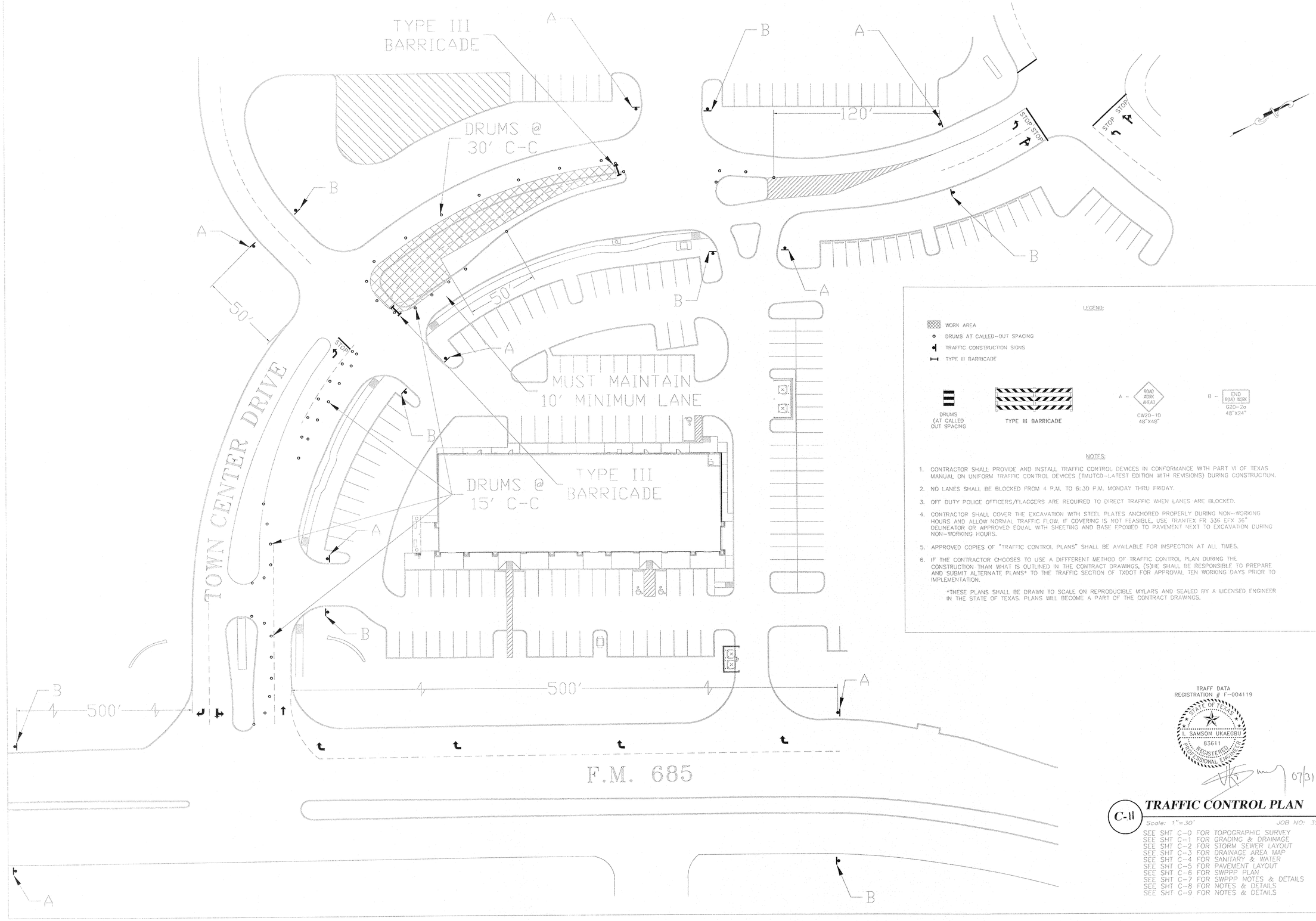

LEGEND:

- WORK AREA
- DRUMS AT CALLED-OUT SPACING
- TRAFFIC CONSTRUCTION SIGNS
- TYPE III BARRICADE

DRUMS (AT CALLED OUT SPACING) — TYPE III BARRICADE — A – ROAD WORK AHEAD CW20-1D 48"X48" — B – END ROAD WORK G20-2a 48"X24"

NOTES:

1. CONTRACTOR SHALL PROVIDE AND INSTALL TRAFFIC CONTROL DEVICES IN CONFORMANCE WITH PART VI OF TEXAS MANUAL ON UNIFORM TRAFFIC CONTROL DEVICES (TMUTCD-LATEST EDITION WITH REVISIONS) DURING CONSTRUCTION.
2. NO LANES SHALL BE BLOCKED FROM 4 P.M. TO 6:30 P.M. MONDAY THRU FRIDAY.
3. OFF DUTY POLICE OFFICERS/FLAGGERS ARE REQUIRED TO DIRECT TRAFFIC WHEN LANES ARE BLOCKED.
4. CONTRACTOR SHALL COVER THE EXCAVATION WITH STEEL PLATES ANCHORED PROPERLY DURING NON-WORKING HOURS AND ALLOW NORMAL TRAFFIC FLOW. IF COVERING IS NOT FEASIBLE, USE TRANTEX FR 336 EFX 36" DELINEATOR OR APPROVED EQUAL WITH SHEETING AND BASE EPOXIED TO PAVEMENT NEXT TO EXCAVATION DURING NON-WORKING HOURS.
5. APPROVED COPIES OF "TRAFFIC CONTROL PLANS" SHALL BE AVAILABLE FOR INSPECTION AT ALL TIMES.
6. IF THE CONTRACTOR CHOOSES TO USE A DIFFFERENT METHOD OF TRAFFIC CONTROL PLAN DURING THE CONSTRUCTION THAN WHAT IS OUTLINED IN THE CONTRACT DRAWINGS, (S)HE SHALL BE RESPONSIBLE TO PREPARE AND SUBMIT ALTERNATE PLANS* TO THE TRAFFIC SECTION OF TXDOT FOR APPROVAL TEN WORKING DAYS PRIOR TO IMPLEMENTATION.

   *THESE PLANS SHALL BE DRAWN TO SCALE ON REPRODUCIBLE MYLARS AND SEALED BY A LICENSED ENGINEER IN THE STATE OF TEXAS. PLANS WILL BECOME A PART OF THE CONTRACT DRAWINGS.

TRAFF DATA
REGISTRATION # F-004119

STATE OF TEXAS
I. SAMSON UKAEGBU
83611
REGISTERED PROFESSIONAL ENGINEER

07/31/12

TRAFFIC CONTROL PLAN

C-11

Scale: 1"=30' JOB NO: 356-1235

SEE SHT C-0 FOR TOPOGRAPHIC SURVEY
SEE SHT C-1 FOR GRADING & DRAINAGE
SEE SHT C-2 FOR STORM SEWER LAYOUT
SEE SHT C-3 FOR DRAINAGE AREA MAP
SEE SHT C-4 FOR SANITARY & WATER
SEE SHT C-5 FOR PAVEMENT LAYOUT
SEE SHT C-6 FOR SWPPP PLAN
SEE SHT C-7 FOR SWPPP NOTES & DETAILS
SEE SHT C-8 FOR NOTES & DETAILS
SEE SHT C-9 FOR NOTES & DETAILS

NewQuest PROPERTIES
8807 W. SAM HOUSTON PARKWAY N., SUITE 200
HOUSTON, TEXAS 77040
P. 281.477.4300 F. 281.477.4399

STONE HILL TOWN CENTER
LOT 7 BLK 4
1616 TOWN CENTER
PFLUGERVILLE, TX
78660-7610
A DEVELOPMENT OF:
NEWQUEST PROPERTIES

ISSUE LOG

NO.	DESCRIPTION	DATE
	ISSUE FOR PERMIT	06/15/12
	ISSUED FOR CONST.	9/19/12

O'BRIEN
5310 HARVEST HILL RD.
SUITE 136
DALLAS, TEXAS 75230
972 . 788 . 1010
www.obrienarch.com

TEAM
TEXAS ENGINEERING AND MAPPING
12810 CENTURY DRIVE
STAFFORD, TEXAS 77477
PHONE: (281) 491-2325 FAX: (281) 491-2325

Traff Data & Associates, Inc.
Traffic Engineering Consultants
9894 Bissonnet, Suite 690
Houston, Texas 77036
Phone: (832) 767-1199 Fax: (832) 767-1299
E-mail: tdaengineers@aol.com

DATE:	JOB:	SCALE:
07-31-12	12024	1"=30'

SHEET NO.
C-11

COPYRIGHT © 2012 OBRIEN THESE DRAWINGS, OR PARTS THEREOF, MAY NOT BE REPRODUCED IN ANY FORM, BY ANY METHOD, FOR ANY PURPOSE, WITHOUT PRIOR WRITTEN CONSENT FROM OBRIEN